Polo Estate 1998 ➤

Body self-diagnosis

Edition 11.1999

Protected by copyright. Copying for private or commercial purposes, in part or in whole, is not permitted unless authorised by Volkswagen AG. Volkswagen AG does not guarantee or accept any liability with respect to the correctness of information in this document. Copyright by Volkswagen AG.

satelettronica

List of Workshop Manual Repair GroupsList of Workshop Manual Repair GroupsList of Workshop Manual Repair Groups

Polo Estate 1998 ➤

Body self-diagnosis

Repair Group

01 - Self diagnosis

Protected by copyright. Copying for private or commercial purposes, in part or in whole, is not permitted unless authorised by Volkswagen AG. Volkswagen AG does not guarantee or accept any liability with respect to the correctness of information in this document. Copyright by Volkswagen AG.

satelettronica

Technical information should always be available to the foremen and mechanics, because their careful and constant adherence to the instructions is essential to ensure vehicle road-worthiness and safety. In addition, the normal basic safety precautions for working on motor vehicles must, as a matter of course, be observed.

All rights reserved.
No reproduction without prior agreement from publisher.

Copyright © 2011 Volkswagen AG, Wolfsburg

Contents

01 - Self diagnosis 1
1 Self-diagnosis 1
1.1 Self-diagnosis 1
1.2 Tools 1
1.3 Connecting fault reader (Caddy, Polo Classic > 09.99, Polo Estate > 09.99) 2
1.4 Connecting fault reader (Polo Classic 10.99 >, Polo Estate 10.99 >) 3
2 Self-diagnosis of airbag system 4
2.1 Self-diagnosis of airbag system 4
2.2 Function 4
2.3 Coding airbag control unit using fault reader V.A.G 1551 13
2.4 Read measured value block 15
2.5 Test box VAS 5056 (Caddy, Polo Classic > 09.99, Polo Estate > 09.99) 20
2.6 Test box VAS 5056 (Polo Classic 10.99 >, Polo Estate 10.99 >) 22
2.7 Adaption (deactivating and activating front passenger's airbag unit in Caddy, Polo Classic > 09.99, Polo Estate > 09.99) 25
2.8 Adaption (deactivating and activating airbags in Polo Classic 10.99 >, Polo Estate 10.99 >) 31
2.9 Final control diagnosis 10.99 > 36
3 Self-diagnosis for convenience system 10.99 > 37
3.1 Self-diagnosis for convenience system 10.99 > 37
3.2 Functional description 37
3.3 Determining which source has possibly triggered the anti-theft alarm 38
3.4 Description of the interior monitoring system 38
3.5 Initiating self-diagnosis for the convenience system 39
3.6 Overview of the selectable functions 40
3.7 Interrogating control unit version 40
3.8 Coding convenience system control unit using fault reader V.A.G 1551 42
3.9 Interrogating fault memory 43
3.10 Erasing fault memory 44
3.11 Ending output 45
3.12 Fault table 45
3.13 Final control diagnosis 48
3.14 Reading measured value block 50
3.15 Display group overview 51
3.16 Matching ignition keys to radio remote control 56
3.17 Matching a new additional key 59
3.18 Radio remote control functional variations 59
3.19 Removing and installing batteries for the main key with radio wave remote control 61

Protected by copyright. Copyright by Volkswagen AG.
Volkswagen AG, Volkswagen AG does not guarantee or accept any liability with respect to the correctness of information in this document.
Copyright by Volkswagen AG. Only for internal use authorised by Volkswagen AG.
satelettronica

Protected by copyright. Copying for private or commercial purposes, in part or in whole, is not permitted unless authorised by Volkswagen AG. Volkswagen AG does not guarantee or accept any liability with respect to the correctness of information in this document. Copyright by Volkswagen AG.

satelettronica

01 - Self diagnosis

1 - Self-diagnosis

1.1 - Self-diagnosis

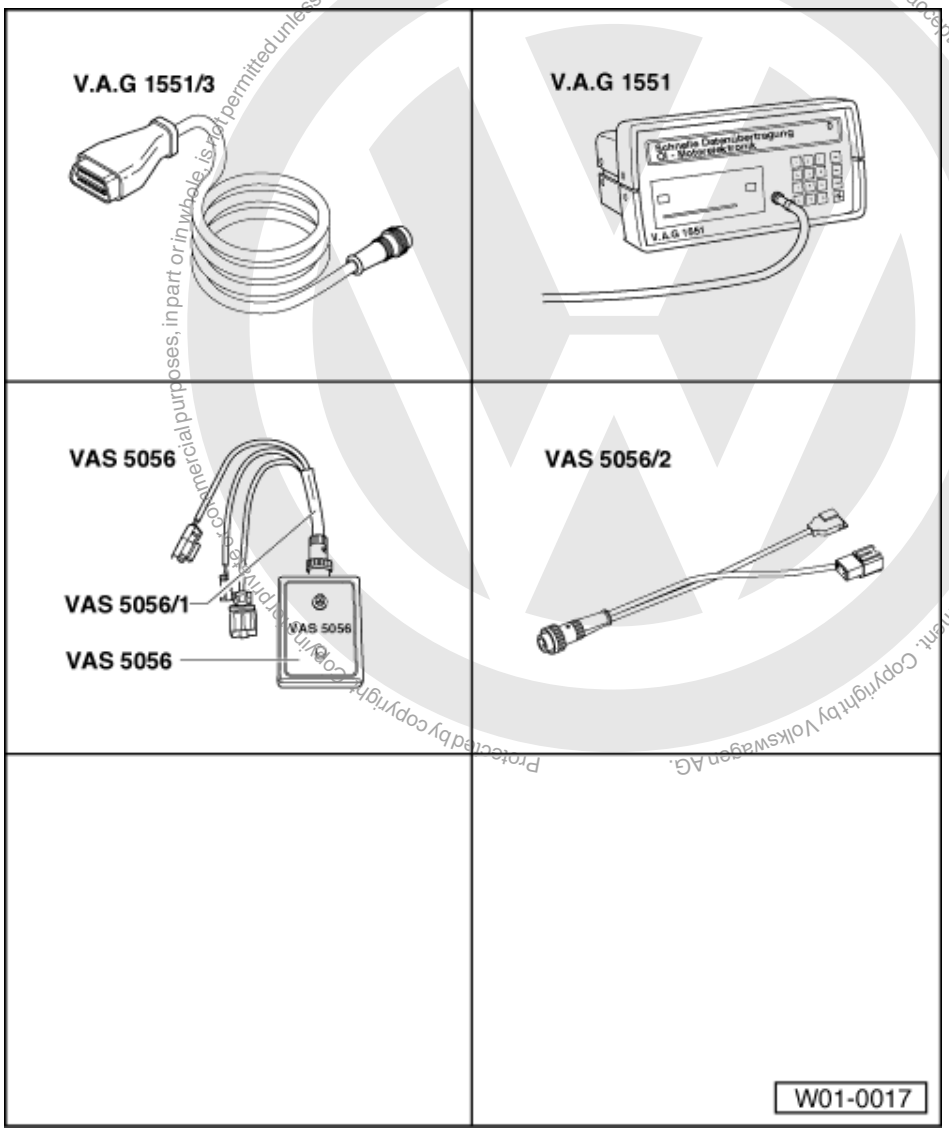

1.2 - Tools

Special tools, workshop equipment, test and measuring appliances and auxiliary items required

- V.A.G 1551/3 Cable
- V.A.G 1551 Fault reader
- VAS 5056 Test box

Protected by copyright. Copyright by Volkswagen AG. Commercial purposes, in part or in whole, is not permitted unless authorised by Volkswagen AG. Volkswagen AG does not guarantee or accept any liability with respect to the correctness of information in this document.
satelettronica

- VAS 5056/2 Adapter cable

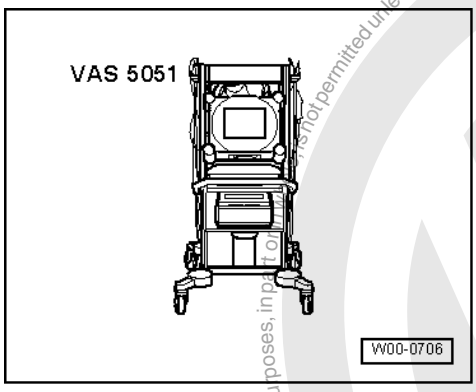

- VAS 5051 Vehicle diagnosis, testing and information system

All the functions that were previously possible with the V.A.G 1551/1552 can be performed with the new tester VAS 5051 in operating mode Vehicle self-diagnosis:

=> Operating instructions for Vehicle Diagnosis, Testing and Information System VAS 5051.

1.3 - Connecting fault reader (Caddy, Polo Classic > 09.99, Polo Estate > 09.99)

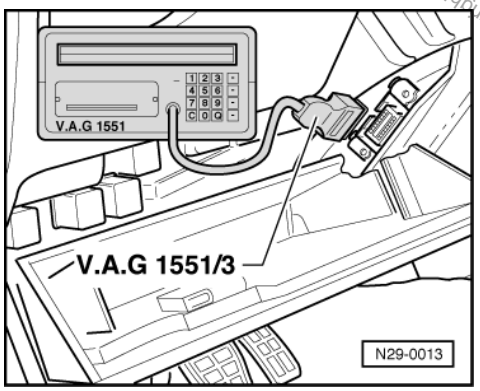

Check prerequisites:

- All fuses according to current flow diagram OK.
- Battery voltage at least 9 V.

Older vehicles

- Fold compartment on left-hand side of dash panel down.
- -> With ignition switched off, connect fault reader V.A.G 1551 with diagnosis cable V.A.G 1551/3.

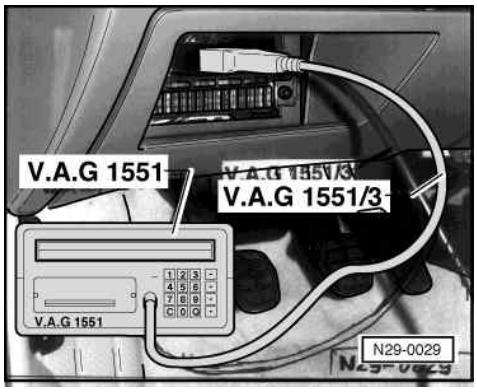

Protected by copyright. Copying for private or commercial purposes, in part or in whole, is not permitted unless authorised by Volkswagen AG. Volkswagen AG does not guarantee or accept any liability with respect to the correctness of information in this document. Copyright by Volkswagen AG.
satelettronica

Newer vehicles

- Remove cover from fuse holder in stowage box on driver's side.
- -> With ignition switched off, connect fault reader V.A.G 1551 with diagnosis cable V.A.G 1551/3.

-> Indicated on display:

```
V.A.G 1551     -GB/8.0-     1.10.1998
```

◆ Display will show the actual software version installed (will be shown briefly in display)

Notes:

◆ If the display remains blank, check V.A.G 1551 voltage supply according to current flow diagram.

=> Current flow diagrams, Electrical fault finding and Fitting locations binder

◆ Additional operating information can be printed out depending on the programme by pressing the HELP key of V.A.G 1551.
◆ The ⇒key is used for advancing the programme sequence.
◆ The PRINT key is used for switching on the printer (warning lamp in key lights up).

-> Indicated on display:

```
V.A.G self-diagnose     HELP
1-Rapid data transfer*
2-Flash code output*
```

* Is displayed alternately.

- Press key -1- for "Rapid data transfer" mode.

and then the following appears in the display:

-> Indicated on display:

```
Rapid data transfer     HELP
Enter address word XX
```

Note:

With the address word 00 the automatic test sequence is carried out, i.e. the fault memories of all systems in the vehicle capable of self-diagnosis are interrogated via the rapid data transfer.

1.4 - Connecting fault reader (Polo Classic 10.99 >, Polo Estate 10.99 >)

Check prerequisites:

◆ All fuses according to current flow diagram OK.
◆ Battery voltage at least 9 V.

The self-diagnosis connector is located in the centre console under the ashtray.

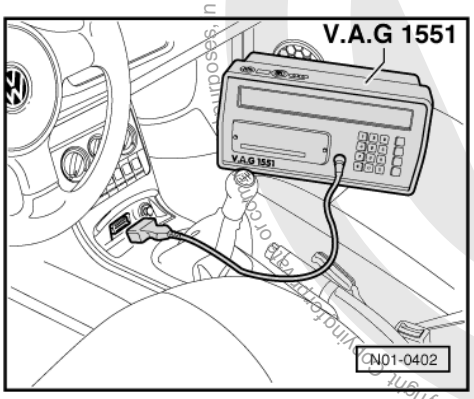

Protected by copyright. Copying for private or commercial purposes, in part or in whole, is not permitted unless authorised by Volkswagen AG. Volkswagen AG does not guarantee or accept any liability with respect to the correctness of information in this document. Copyright by Volkswagen AG.
satelettronica

- Remove ashtray by pulling out upwards.
- -> With ignition switched off, connect fault reader V.A.G 1551 with diagnosis cable V.A.G 1551/3.

-> Indicated on display:

```
V.A.G 1551     -GB/8.0-     1.10.1998
```

- Display will show the actual software version installed (will be shown briefly in display)

-> Indicated on display:

```
V.A.G self diagnosis     HELP
1-Rapid data transfer*
2-Flash code output*
```

* Is displayed alternately.

Notes:

- If the display remains blank, check V.A.G 1551 voltage supply according to current flow diagram.

=> Current flow diagrams, Electrical fault finding and Fitting locations binder

- Additional operating information can be printed out depending on the programme by pressing the HELP key of V.A.G 1551.
- The ⇒key is used for advancing the programme sequence.
- The PRINT key is used for switching on the printer (warning lamp in key lights up).

- Switch on ignition.
- Switch on printer with Print button (warning lamp in button lights up).
- Press key -1- for "Rapid data transfer" mode.

-> Indicated on display:

```
Rapid data transfer     HELP
Enter address word XX
```

Note:

With the address word 00 the automatic test sequence is carried out, i.e. the fault memories of all systems in the vehicle capable of self-diagnosis are interrogated via the rapid data transfer.

2 - Self-diagnosis of airbag system

2.1 - Self-diagnosis of airbag system

2.2 - Function

The airbag control unit (J234) is located behind the console on the tunnel. It is equipped with a fault memory.

The control unit detects faults in the airbag system and stores them in a permanent memory.

Faults which can be attributed to a temporary open circuit in the wiring or a loose contact, will also be stored. These faults will be displayed as sporadic faults "SP".

After the ignition is switched on, the airbag warning lamp (K75) lights up for about 4 seconds and then goes out again. If the lamp then flashes for a further 12 seconds then this signals that the passenger airbag is blocked.

- If the warning lamp (K75) does not go out again after about 4 seconds, then the voltage supply to the airbag control unit (J234) is faulty. Interrogate fault memory => Page 7 .
- A fault is present if the warning lamp (K75) lights up again. Interrogate fault memory => Page 7 .

Protected by copyright. Copying for private or commercial purposes, in part or in whole, is not permitted unless authorised by Volkswagen AG. Volkswagen AG does not guarantee or accept any liability with respect to the correctness of information in this document. Copyright by Volkswagen AG.
satelettronica

- If the warning lamp (K75) flashes continuously then the control unit (J234) must be renewed.

To commence fault finding, initiate self-diagnosis and retrieve the stored information with the fault reader V.A.G 1551.

The fault information displayed is used to refer to a fault table with notes on the possible causes for directed repair measures.

Warning! Only visual check of wiring! Do not carry out electrical continuity tests or measurements to igniter circuits! Only check wiring with ignition switched off!

During test and assembly work, other control units may recognise faults such as e.g. plug disconnected. Therefore, after completing repairs, you must interrogate and erase the fault memories of all control units. To do this:

- Press key 0 twice for address word "Automatic test sequence" and confirm entry with Q key. The V.A.G 1551 transmits all known address words one after the other.

When a control unit answers with its identification the number of stored faults appears on the display or "No fault recognised".

Any system faults that are stored will be displayed one after the other and printed out. The V.A.G 1551 will then transmit the next address word.

-> The automatic test sequence has ended when following is indicated on display:

```
V.A.G SELF-DIAGNOSIS      HELP
1 - Rapid data transfer*
2 - Flash code output*
```

Note:

If a fault is recognised:

- . Rectify fault
- 2. Erase fault memory (function 05).
- 3. Interrogate fault memory again (function 02).

Introducing self-diagnosis for airbag

- Connecting fault reader => Page 2 .
- Switch on ignition.

-> Indicated on display:

```
Rapid data transfer      HELP
Enter address word XX
```

- Press keys -1- and -5- (the address word of the vehicle system to be tested "Airbag" is entered with 15).

-> Indicated on display:

```
Rapid data transfer      Q
15 Airbag
```

- Confirm entry with the Q key.

-> Indicated on display (e.g. 6N0 909 603 AM for driver's and front passenger's airbags):

```
6N0 909 603      AM          AIRBAG VW2
V01      □
Coding 16717      WSC12345
```

- Press ⇒key.

-> Indicated on display:

Protected by copyright. Copyright by Volkswagen AG. Copyright by Volkswagen AG. Volkswagen AG does not guarantee or accept any liability with respect to the correctness of information in this document. Copying for private or commercial purposes, in part or in whole, is not permitted unless authorised by Volkswagen AG.
satelettronica

```
Rapid data transfer      HELP
Select function XX
```

Notes:

```
Rapid data transfer      HELP
Control unit does not answer!
```

-> If one of the fault messages opposite appears in the display, the possible causes of the fault can be printed out with the HELP key.

```
Rapid data transfer      HELP
K wire not switching to positive!
```

-> Ignition must be switched on.

```
Rapid data transfer
No signal from control unit!
```

-> Faults have occurred at the start of or during the programme (external influences?).

```
Rapid data transfer
Fault in communication build up
```

-> Check diagnosis wires as well as voltage supply and earth connection.

- After rectifying the possible causes of the fault, once again enter the address word 15 for "Airbag" and confirm with the Q key.

-> Indicated in display after entering the address word 15:

```
Rapid data transfer
Tester sends the address word 15
```

and then the following appears in the display:

-> Control unit identification number is displayed (6N0 909 603 AM for driver's and front passenger's airbags):

```
6N0 909 603      AM          AIRBAG VW2
V01      □
Coding 16717      WSC12345
```

- Press ⇒key.

-> Indicated on display:

```
Rapid data transfer      HELP
Select function XX
```

List of selectable functions

	Page
01 - Interrogating control unit version	25
02 - Interrogating fault memory	
03 - Final control diagnosis	
05 - Erasing fault memory	
06 - Ending output	
07 - Coding control unit	
08 - Reading measured value block	
10 - Adaptation	

Notes:

- A list of possible functions is printed out after pressing the HELP key.
- Do not select further functions, which can be printed out after pressing the HELP key.
- After the function is completed the V.A.G 1551 returns to the following start position:

-> Indicated on display:

Protected by copyright. Copying for private or commercial purposes, in part or in whole, is not permitted unless authorised by Volkswagen AG. Volkswagen AG does not guarantee or accept any liability with respect to the correctness of information in this document. Copyright by Volkswagen AG.
satelettronica

```
Rapid data transfer      HELP
Select function XX
```

Interrogate control unit version

- Connecting fault reader => Page 5 .
- Switch on printer with Print button (warning lamp in button lights up).
- Press keys -0- and -1-.

-> Indicated on display:

```
Rapid data transfer      Q
01-Interrogate control unit version
```

- Confirm entry with the Q key.

Control unit VW3 (example)

-> Indicated on display (see parts catalogue for latest control unit version).

```
1J0 909 609 A      AIRBAG VW 3 SG
V03      □
Coding 00068      WSC12345
```

- Top line Part No. of control unit System designation (AIRBAG VW3 SG V03) S-Side airbag, G-Electr. belt tensioner, V03-Version number
- Lower line Code number Dealership number1)

1)- Will be automatically stored in the control unit when entering the system.

Control unit VW5 (example)

-> Indicated on display (see parts catalogue for latest control unit version).

```
6Q0909605 A      0F AIRBAG      VW5 01
0004 □
Coding 12358      WSC12345
```

- Top line Part No. of control unit (6Q0909605 A Index (0F) System designation (AIRBAG VW5) Version number crash sensor (01) Version number software (0004)
- Lower line Code number Dealership number1)

1)- Will be automatically stored in the control unit when entering the system.

- Press -> key.

-> Indicated on display:

```
Rapid data transfer      HELP
Select function XX
```

Interrogating fault memory

- Connecting fault reader => Page 5 .
- Switch on printer with Print button (warning lamp in button lights up).
- Press keys -0- and -2- (the function "Interrogate fault memory" is entered with 02).

-> Indicated on display:

```
Rapid data transfer      HELP
Select function XX
```

- Press keys -0- and -2- (the function "Interrogate fault memory" is entered with 02).

-> Indicated on display:

Protected by copyright. Copying for private or commercial purposes, in part or in whole, is not permitted unless authorised by Volkswagen AG. Volkswagen AG does not guarantee or accept any liability with respect to the correctness of information in this document. Copyright by Volkswagen AG.
satelettronica

```
Rapid data transfer      Q
02 - Interrogate fault memory
```

- Confirm entry with the Q key.

-> The number of stored faults appears in the display.

```
X faults recognized!
```

The stored faults are displayed and printed out one after the other.

- Rectify fault(s) with aid of fault table => Page 9 .

-> If "No fault recognised" is displayed the programme will return to the initial position after pressing the ⇒ key.

```
No fault recognised!
```

-> Indicated on display:

```
Rapid data transfer      HELP
Select function XX
```

If something else is displayed:

=> Fault reader operating instructions

- End output (function 06) => Page 9 .
- Switch off ignition and separate diagnostic connections.

Note:

If a fault is recognised:

- 1. Rectify fault.
- 2. Interrogate fault memory (function 02).
- 3. Erase fault memory (function 05).

Erasing fault memory

Prerequisites:

- Faults are rectified
- Fault memory interrogated again

-> Indicated on display:

```
Rapid data transfer      HELP
Select function XX
```

- Press keys -0- and -5- (the function "Erase fault memory" is entered with 05).

-> Indicated on display:

```
Rapid data transfer      Q
05 Erase fault memory
```

- Confirm entry with the Q key.

-> Indicated on display:

```
Rapid data transfer
Fault memory is erased!
```

- Press ⇒ key.

-> Indicated on display:

Reproduced by copyright. Copying for private or commercial purposes, in part or in whole, is not permitted unless authorised by Volkswagen AG. Volkswagen AG does not guarantee or accept any liability with respect to the correctness of information in this document. Copyright by Volkswagen AG.
satelettronica

```
Rapid data transfer      HELP
Select function XX
```

Notes:

```
Warning!
Fault memory is not interrogated
```

-> If this appears in the display, the test sequence is faulty.

- Adhere strictly to test sequence; first of all interrogate fault memory, then erase memory.

End output

- Press keys -0- and -6- to end the output.

-> Indicated on display:

```
Rapid data transfer      Q
06 End output
```

- Confirm entry with the Q key.

-> Indicated on display:

```
Rapid data transfer      Help
Enter address word XX
```

- Switch off ignition.
- Disconnect connections to fault reader V.A.G 1551.

Fault table

Notes:

- The following table lists all the faults, with the corresponding 5-digit code numbers, that can be recognized by the airbag control unit (J234) and printed out by the V.A.G 1551.
- Fault codes appear only on print-out.
- Before replacing a component shown as faulty, check wiring and connections to the component as well as earth connections according to current flow diagram.
- Check all relay plate connections are seated securely.
- When repair has been carried out, the fault memory must always be interrogated again with the fault reader V.A.G 1551 and erased.
- In addition, the fault type may also appear in the fault table.

V.A.G 1551 printout	Possible cause of fault	Rectifying fault
00000 No fault recognized	If "No fault recognized" appears after performing repairs, the self-diagnosis is ended.	

V.A.G 1551 printout	Possible cause of fault	Rectifying fault
00532 Supply voltage Signal too large	Alternator defective	- Check alternator: => Current flow diagrams, Electrical fault finding, Fitting locations
Signal too small	Wiring or connections to airbag control unit (J234)	- Test wiring and connections to control unit using current flow diagram

V.A.G 1551 printout	Possible cause of fault	Rectifying fault
00588		

Protected by copyright. Copying for private or commercial purposes, in part or in whole, is not permitted unless authorised by Volkswagen AG. Volkswagen AG does not guarantee or accept any liability with respect to the correctness of information in this document. Copyright by Volkswagen AG.
satelettronica

V.A.G 1551 printout	Possible cause of fault	Rectifying fault
Driver's airbag igniter (N95) Resistance value too large Resistance value too small Short to positive Short to earth	Defective wiring or connectors Driver's airbag (N95) defective Return spring with slip ring (F138) defective	- Renew defective wiring or connectors - Renew driver's airbag (N95) - Renew return spring with slip ring - Read measured value block =>Page 15

V.A.G 1551 printout	Possible cause of fault	Rectifying fault
00589 Front passenger's airbag igniter 1 (N131) Resistance value too large Resistance value too small Short to positive Short to earth	Defective wiring or connectors Front passenger's airbag igniter (N131) defective	- Renew defective wiring or connectors - Renew front passenger's airbag unit (N131) - Read measured value block =>Page 15
00594 Airbag ignition circuit Short circuit	Defective wiring or connections to airbag unit	- Read measured value block =>Page 15

V.A.G 1551 printout	Possible cause of fault	Rectifying fault
00595 Crash data stored		- Renew control unit The "crash data registered" can be erased twice when the side airbag or belt tensioner has been triggered. The fault "control unit defective" will be registered and the control unit must be renewed after the 3rd time the side airbag or belt tensioner has been triggered.
Short circuit	Short circuit between igniter circuits	- Renew control unit Renew defective wiring or connections Replace airbag unit and all damaged components
01025 Fault warning lamp activation defective	Fault warning lamp defective	- Renew combi instrument

Protected by copyright. Copying for private or commercial purposes, in part or in whole, is not permitted unless authorised by Volkswagen AG. Volkswagen AG does not guarantee or accept any liability with respect to the correctness of information.
satelettronica

V.A.G 1551 printout	Possible cause of fault	Rectifying fault
	Defective wiring or connections Control unit defective	- Renew defective wiring or connections Control unit defective

V.A.G 1551 printout	Possible cause of fault	Rectifying fault
01217 Driver's, side airbag igniter (N199) Resistance too high Resistance too low Short to positive Short to earth	Defective wiring or connections Driver's side, side airbag igniter (N199) defective	- Renew defective wiring or connections Read measured value block =>Page 15 - Renew driver's side, side airbag (N199)

V.A.G 1551 printout	Possible cause of fault	Rectifying fault
01218 Front passenger's, side airbag igniter (N200) Resistance too high Resistance too low Short to positive Short to earth	Defective wiring or connections Passenger's side, side airbag igniter (N200) defective	- Renew defective wiring or connections - Renew passenger's side, side airbag (N200) - Read measured value block =>Page 15

V.A.G 1551 printout	Possible cause of fault	Rectifying fault
01221 Driver's side, side airbag crash sensor (G179) Short to positive Short to earth defective	Defective wiring or connections Crash sensor defective Control unit defective	- Renew defective wiring or connections - Renew damaged component
No or incorrect setting	Crash sensor and control unit do not match	- Exchange crash sensor or control unit - Read measured value block =>Page 15

V.A.G 1551 printout	Possible cause of fault	Rectifying fault
01222		

Protected by copyright. Copying for private or commercial purposes, in part or in whole, is not permitted unless authorised by Volkswagen AG. Volkswagen AG does not guarantee or accept any liability with respect to the correctness of information in this document. Copyright by Volkswagen AG.

satelettronica

V.A.G 1551 printout	Possible cause of fault	Rectifying fault
Passenger's side, side airbag crash sensor (G180) Short to positive Short to earth Defective		
	Defective wiring or connections	- Renew defective wiring or connections
	Crash sensor defective Control unit defective	- Renew damaged component
No or incorrect setting	Crash sensor and control unit do not match	- Exchange crash sensor or control unit - Read measured value block =>Page 15

V.A.G 1551 printout	Possible cause of fault	Rectifying fault
012801) Front passenger's airbag is deactivated	Front passenger's airbag not functional	Control unit was adapted
012811) Driver's airbag is deactivated	Driver's airbag not functional	Control unit was adapted
012841) Driver's side airbag is deactivated	Driver's side airbag not functional	Control unit was adapted
012851) Front passenger's side airbag is deactivated	Passenger's side airbag not functional	Control unit was adapted
012861) Driver's belt tensioner is deactivated	Driver's belt tensioner not functional	Control unit was adapted
012871) Front passenger's belt tensioner is deactivated	Front passenger's belt tensioner not functional	Control unit was adapted

1) The fault message will only be stored in the fault memory when the adaption is activated.

V.A.G 1551 printout	Possible cause of fault	Rectifying fault
01312 Data bus drive line Defective	Defective wiring or connections	- Renew or repair defective wiring or connections
01317 Control unit in dash panel insert - J285 No communication	Defective wiring or connections	- Renew or repair defective wiring or connections
No or incorrect setting	Crash sensor and control unit do not match	- Exchange crash sensor or control unit
65535 Control unit defective	Control unit defective	Renew control unit

Protected by copyright. Copying for private or commercial purposes, in part or in whole, is not permitted unless authorised by Volkswagen AG. Volkswagen AG does not guarantee or accept any liability with respect to the correctness of information in this document. Copyright by Volkswagen AG.
satelettronica

2.3 - Coding airbag control unit using fault reader V.A.G 1551

Coding is only possible when a new control unit is used.

- Connecting fault reader => Page 5 .

-> Indicated on display (for current control unit versions, see parts catalogue):

```
6N0 909 603     AIRBAG     VW2
V01
Coding 00000     WSC 12345
```

- Press ⇒key.

-> Indicated on display:

```
Rapid data transfer     HELP
Select function XX
```

- Press keys -0- and -7- (with 07 the function "Code control unit" is selected).

-> Indicated on display:

```
Rapid data transfer     Q
07 Code control unit
```

- Confirm entry with the Q key.

-> Indicated on display:

```
Code control unit       0
Enter code number       XXXXX (0-32000)
```

- Enter code number according to table:

Caddy

Vehicle equipment	Part No.	Index	Code number
Only driver's air-bag	6N0 909 603	AT	16724
Only driver's air-bag	1J0 909 603	AF	16710
Only driver's air-bag	1J0 909 603	CD	17220
Driver's + front pass. airbag	6N0 909 603	AS	16723
Driver's + front pass. airbag	1J0 909 603	AE	16709
Driver's + front pass. airbag	1J0 909 603	CB	17218

Polo Classic, Polo Estate

Vehicle equipment	Part No.	Index	Code number
Only driver's air-bag	6N0 909 603	AN	16718
Only driver's air-bag	1J0 909 603	AD	16708
Only driver's air-bag	1J0 909 603	BG	16967
Only driver's air-bag	1J0 909 603	BP	16976

Protected by copyright. Copying for private or commercial purposes, in part or in whole, is not permitted unless authorised by Volkswagen AG. Volkswagen AG does not guarantee or accept any liability with respect to the correctness of information in this document. Copyright by Volkswagen AG.
satelettronica

Only driver's air-bag	1J0 909 603	BR	16978
Only driver's air-bag	1J0 909 603	BT	16980
Driver's + front pass. airbag	6N0 909 603	AM	16717
Driver's & front pass. airbag	1J0 909 603	AC	16707
Driver's & front pass. airbag	1J0 909 603	BF	16966
Driver's + front pass. airbag	1J0 909 603	BN	16974
Driver's + front pass. airbag	1J0 909 603	BQ	16977
Driver's + front pass. airbag	1J0 909 603	BS	16979
Driver's and side airbags + electr. belt tensioner	1J0 909 609	P	00080
Driver's and side airbags + electr. belt tensioner	1J0 909 609	R	00082
Driver's, front pass. + side air-bags + electr. belt tensioner	1J0 909 609	N	00078
Driver's, front pass. + side air-bags + electr. belt tensioner	1J0 909 609	Q	00081

- Confirm entry with the Q key.

-> The control unit identification number with the relevant letter index, code number and workshop code is displayed.

```
6N0 909 603     AM     AIRBAG     VW2
     V01
Coding 16717     WSC 12345
```

If the contents of the display are as shown then the coding is successful.

If the control unit code number entered is not accepted, then the FAULT and the code number not accepted will be displayed, e.g. 00200:

-> Indicated on display:

```
FAULT
Coding 00200 not accepted
```

In this case the control unit has not been programmed with the relevant data for the vehicle.
Coding is then not possible.
The airbag warning lamp (K 75) will not extinguish and lights up continuously.
A check must then be completed to see if the correct control unit for the vehicle has been installed (compare Part No. and letter index), or whether an incorrect code number has been entered.

Ending function:

- Press ⇒key.

-> Indicated on display:

```
Rapid data transfer     HELP
Select function XX
```

Protected by copyright. Copying for private or commercial purposes, in part or in whole, is not permitted unless authorised by Volkswagen AG. Volkswagen AG does not guarantee or accept any liability with respect to the correctness of information in this document. Copyright by Volkswagen AG.
satelettronica

- Press keys -0- and -6- to end the output.
- Confirm entry with the Q key.

-> Indicated on display:

```
Rapid data transfer      Q
06 End output
```

Airbag warning lamp (K75) must go out after approx. 4 seconds.

2.4 - Read measured value block

Warning!
Only visual check of wiring!
Do not carry out electrical continuity tests or measurements to ignition circuits!
Only check wiring with ignition switched off!

-> Indicated on display:

```
Rapid data transfer      HELP
Select function XX
```

- Press keys -0- and -8- (08 initiates the "Read measured value block" function).

-> Indicated on display:

```
Rapid data transfer       Q
08 - Read measured value block
```

- Confirm entry with the Q key.

-> Indicated on display:

```
Read measured value block      HELP
Input display group number XX
```

- Select relevant display group number and confirm entry with Q key.

-> Indicated on display:
(1...4 = Display zones)

```
Read measured value block      1
"
     1      2      3      4
```

The explanation of the individual display zones on the display is found in the evaluation of display group numbers => Page 16 .

If the displayed values in all display zones are "correct":

- Press ⇒key.

Note:

To change to another display group proceed as follows:

Display group	V.A.G 1551	V.A.G 1552
Higher	Press key 3	Press ↑key
Lower	Press key 1	Press ↓key
Skip	Press key C	Press key C

- Displayed after pressing C key.

-> Indicated on display:

satelettronica
Protected by copyright. Copying for private or commercial purposes, in part or in whole, is not permitted unless authorised by Volkswagen AG. Volkswagen AG does not guarantee or accept any liability with respect to the correctness of information in this document. Copyright by Volkswagen AG.

```
Rapid data transfer      HELP
Select function XX
```

Note:

Interrogate fault memory after completing the function "Read measured value block" => Page 7 .

Display group 001

Display group 001						
Read measured value block 1 ⇒				◂ Indicated on display		
xxxx	xxx	xxx	xxxx			
1	2	3	4	◂ Display zones	Specification	Evaluation
				Igniter, front passenger's belt tensioner (N154)1)	Correct	=> Page 16
				Igniter, driver's belt tensioner (N 153)1)	Correct	
				Igniter, front passenger's airbag	Correct	
				Igniter, driver's airbag	Correct	

1) Only valid for vehicles with electric belt tensioners, the display is not relevant for vehicles with mechanical belt tensioners.

Evaluation for display group number 001

Display zone	Designation	Display contents	Rectifying fault
1	Igniter for airbag (driver's side) (N95)	correct trig. earth trig. positive too low	- No faults present Visual check of wiring Watch display and check connectors of appropriate current circuit for correct engagement and tight fit. If display changes to "correct", erase fault memory Pull igniter connector off airbag unit Display changes to "too high" Renew airbag unit Display remains on "too low" Separate connector on coil connector with slip ring Display changes to "too high" Renew coil connector with slip ring Display remains on "too low" Renew wiring harness
			Continued on next page

Protected by copyright. Copyright for private or commercial purposes, in part or in whole, is not permitted unless authorised by Volkswagen AG. Volkswagen AG does not guarantee or accept any liability with respect to the correctness of information in this document. Copyright by Volkswagen AG.
satelettronica

Display zone	Designation	Display contents	Rectifying fault
1		Too high	- Pull igniter connector off airbag unit Fit igniter connector on-to inert igniter on VAS 5056 => Page 22 . Display changes to "correct" Renew coil connector with slip ring Display remains on "too high" Press button on VAS 5056 Display changes to "too high" Renew wiring harness
			Continued on next page
2	Airbag igniter 1, front passenger side (N131)	Correct Trig. earth Trig. positive Too low Too high	No faults present Visual check of wiring Watch display and check connectors of respective current circuit for correct en-gagement and tight fit. If display changes to "correct", erase fault memory Separate connector between wiring harness and adapter cable to airbag unit Display changes to "too high" Renew airbag unit Display remains on "too low" Renew wiring harness Connect test box VAS 5056 to passeng-er's circuit wiring harness => Page 22 . Press button on VAS 5056 Display changes to "too low" Renew airbag unit Display remains on "too high" Renew wiring harness

Display zone	Designation	Display contents	Fault elimination
3	Igniter driver's belt tensioner (N153)1)	Correct Too high Too low Trig. earth Trig. positive	- Visual check of wiring Watch display and check connectors of appropriate current circuit for correct engagement and tight fit. If the display changes to "correct", erase fault memory Replace driver's/front passenger's belt tensioner
4	Igniter front passenger's belt tension-er (N154)1)	Correct Too high Too low Trig. earth Trig. positive	

1) Only valid for vehicles with electric belt tensioners, the display is not relevant for vehicles with mechanical belt tensioners.

Protected by copyright. Copying for private or commercial purposes, in part or in whole, is not permitted unless authorised by Volkswagen AG. Volkswagen AG does not guarantee or accept any liability with respect to the correctness of information in this document. Copyright by Volkswagen AG.

satelettronica

Display group (002)1/003

Read measured value block 3 ⇒				◂ Indicated on display		
xxxx	xxx	xxx	xxxx			
1	2	3	4	◂ Display zones	Specification	Evaluation
				Front passenger's seat belt latch switch	Not relevant	
				Driver's seat belt latch switch	Not relevant	
				Front passenger's seat occupied recognition	Not relevant	
				Supply voltage	correct	=> Page 18

Evaluating display group number (002)1/003

Display zone	Designation	Display contents	Rectifying fault
1	Voltage supply	correct too low	- Battery voltage min. 9 Volt Check alternator: => Current flow diagrams, Electrical fault finding, Fitting locations Visual check of wiring
2	Not relevant		
3	Not relevant		
4	Not relevant		

1) Older control units (VW2) indicate supply voltage in display group 2.

Display group 005

Read measured value block 5 ⇒				◂ Indicated on display		
xxxx	xxx	xxx	xxxx			
1	2	3	4	◂ Display zones	Specification	Evaluation
				Rear near side, side airbag igniter	Not relevant	
				Rear off side, side airbag igniter	Not relevant	
				Front passenger's, side airbag igniter	correct	=> Page 18
				Driver's, side airbag igniter	correct	

Evaluating display group number 005

Display zone	Designation	Display contents	Rectifying fault
1	Driver's side, side airbag igniter (N199)	correct too high too low trig. earth trig. positive	- Visual check of wiring Watch display and check connectors of appropriate current circuit for correct engagement and tight fit. If display changes to "correct", erase fault memory. Renew defective wiring or connections - Renew driver's or front passenger's side, side airbag
2	Front passenger's side, side airbag igniter (N200)	correct too high too low trig. earth trig. positive	
3	Not relevant		

satelettronica
Protected by copyright. Copying for private or commercial purposes, in part or in whole, is not permitted unless authorised by Volkswagen AG. Volkswagen AG does not guarantee or accept any liability with respect to the correctness of information in this document. Copyright by Volkswagen AG.

Display zone	Designation	Display contents	Rectifying fault
4	Not relevant		

Display group 007

Display group 007						
Read measured value block 7			⇒	◂ Indicated on display		
xxx	xxx	xxx	xxx			
1	2	3	4	◂ Display zones	Specification	Evaluation
				Empty1)		
			Empty1)			
		Front passenger's head airbag igniter (N252)			not fitted	=> Page 19
	Driver's head airbag igniter (N251)				not fitted	

1) Empty means in this case: Display zone is blank

Evaluating display group number 007

Display zone	Designation	Display contents	Rectifying fault
1	Driver's head airbag igniter (N251)	not fitted	Fault not present
2	Front passenger's head airbag igniter (N252)	not fitted	

Display group 009

Display group 009						
Read measured value block 9			⇒	◂ Indicated on display		
xxx	xxx	xxx	xxx			
1	2	3	4	◂ Display zones	Specification	Evaluation
				Front passenger's side rear, crash sensor identification (G257)	e.g.01 or not fitted	=> Page 20
			Driver's side rear, crash sensor identification (G256)		e.g.01 or not fitted	
		Front passenger's side crash sensor identification (G180)			e.g.01 or not fitted	
	Driver's side crash sensor identification (G179)				e.g.01 or not fitted	

Protected by copyright. Copying for private or commercial purposes, in part or in whole, is not permitted unless authorised by Volkswagen AG. Volkswagen AG does not guarantee or accept any liability with respect to the correctness of information in this document. Copyright by Volkswagen AG.
satelettronica

Evaluating display group number 009

Display zone	Description	Display	Rectifying fault
	Driver's side crash sensor identification (G179)	e.g.01 or not fitted	▪ The identification number displayed for the crash sensor (for side crash) must correspond to the displayed crash sensor version number when the control unit version is displayed => Page 7 If the crash sensor identification number and the displayed version number do not correspond when the control unit identification is displayed, the crash sensors or the control unit must be renewed respectively
	Front passenger's side crash sensor identification (G180)	e.g.01 or not fitted	
	Driver's side rear crash sensor identification (G256)	e.g.01 or not fitted	
	Front passenger's side rear, crash sensor identification (G257)	e.g.01 or not fitted	

2.5 - Test box VAS 5056 (Caddy, Polo Classic > 09.99, Polo Estate > 09.99)

It is possible to check the individual components of the airbag system with test box VAS 5056 and to check which components are actually defective.

Note:

Observe safety measures when working on airbags

=> General body repairs, interior; Repair group 69; Airbag; Safety measures when working on airbag Airbag Safety measures when working on airbag

Connecting test box to driver's airbag components

- Remove front passenger's airbag unit

=> General body repairs, interior; Repair group 69; Airbag; Removing and installing front passenger's airbag unit. Airbag Removing and installing front passenger's airbag unit.

- Remove steering column switch lower part.

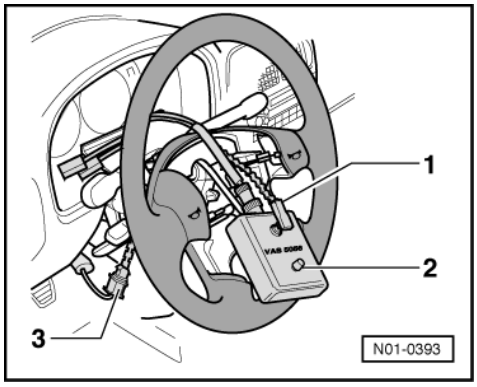

Protected by copyright. Copying for private or commercial purposes, in part or in whole, is not permitted unless authorised by Volkswagen AG. Volkswagen AG does not guarantee or accept any liability with respect to the correctness of information in this document. Copyright by Volkswagen AG.
satelettronica

- -> Connect igniter connector to inert igniter -1- and separate wiring harness to coil connector with slip ring. Connect connector -3- from VAS 5056/1 with airbag wiring harness.

  1 - Igniter connector on inert igniter
  2 - Button
  3 - Connector

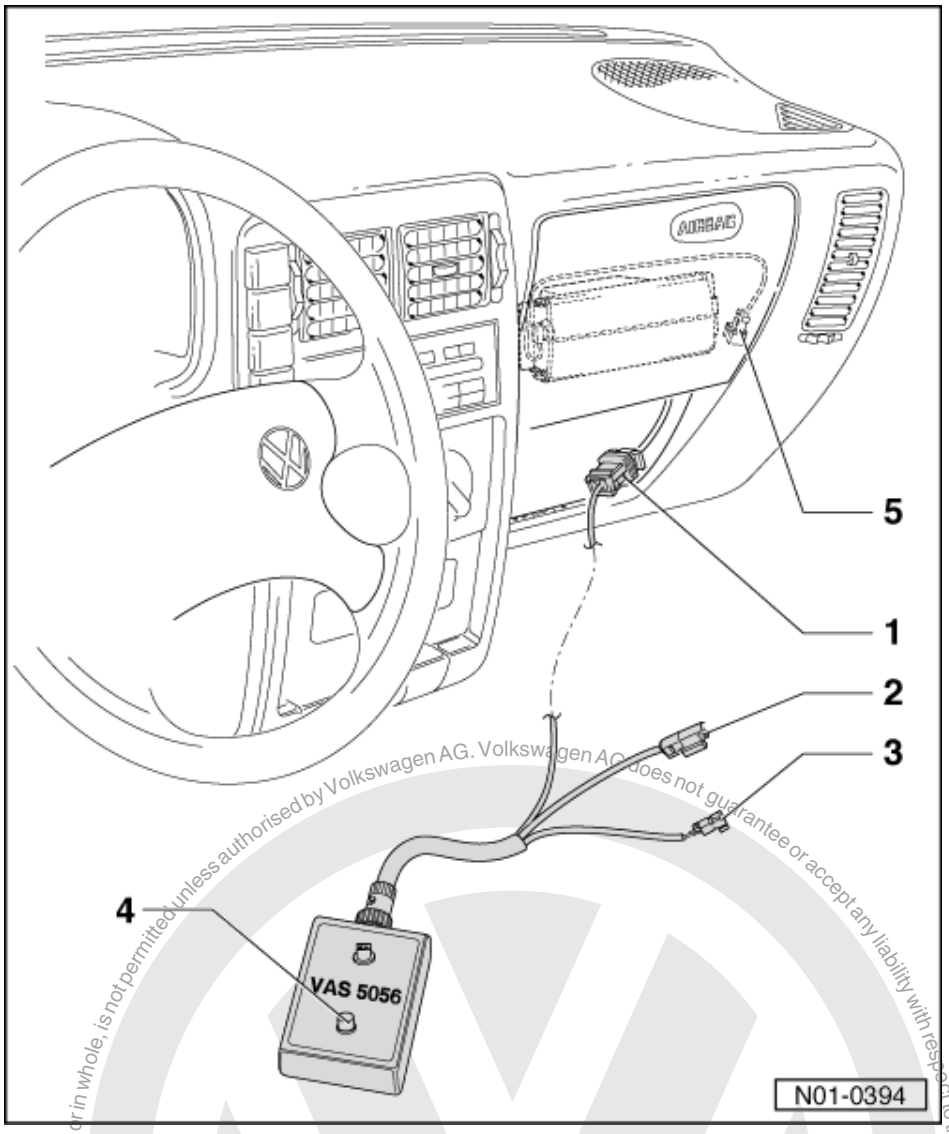

Connecting test box to passenger's airbag components

- Remove stowage compartment, passenger's side or glove box

=> General body repairs, interior; Repair group 68; Stowage compartments, covers and trims Stowage compartments, covers and trims

- Remove front passenger's airbag connector - 5 - from clip and separate it.
- Connect connector of wiring harness (body side) for front passenger airbag unit to yellow 2-pin connector - 1 - of VAS 5056/1.

Protected by copyright. Copying for private or commercial purposes, in part or in whole, is not permitted unless authorised by Volkswagen AG. Volkswagen AG does not guarantee or accept any liability with respect to the correctness of information in this document. Copyright by Volkswagen AG.
satelettronica

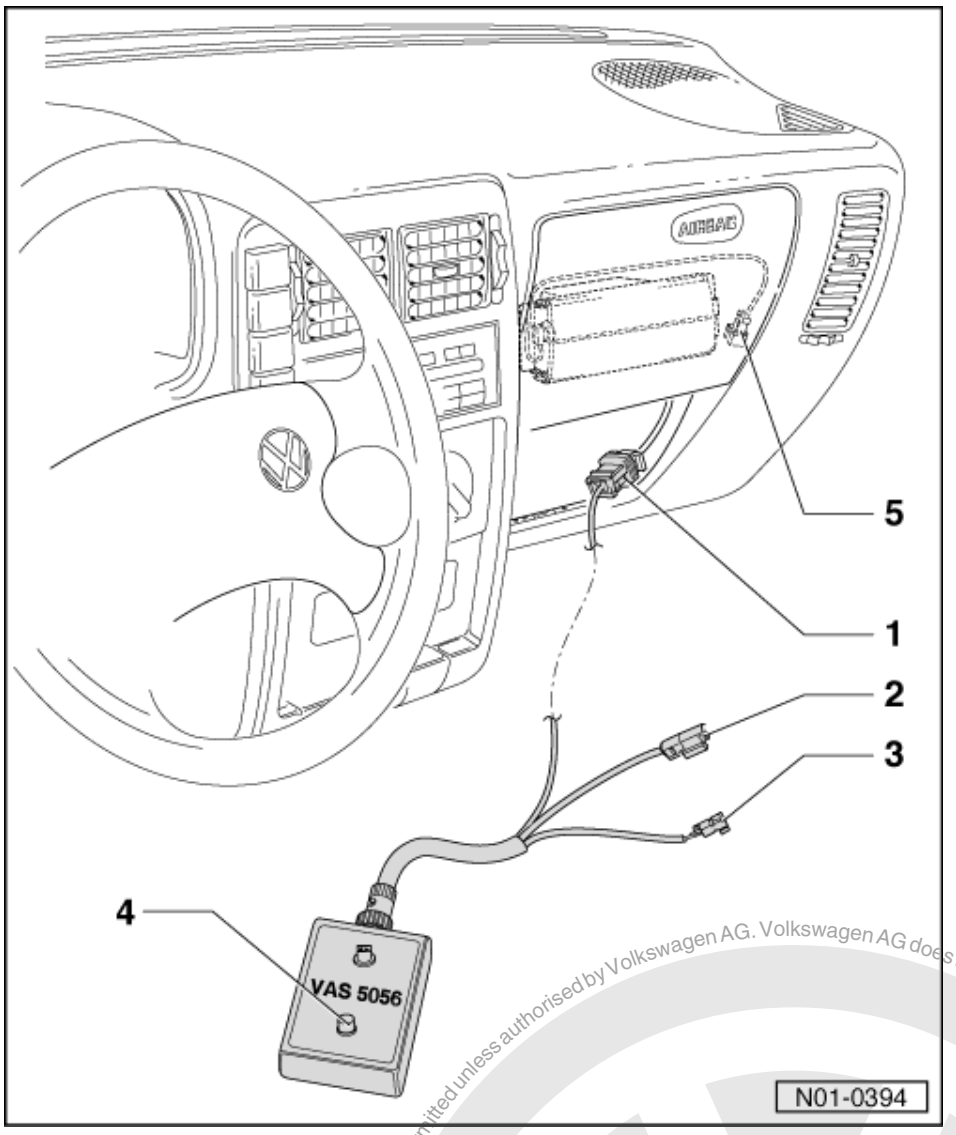

1 Wiring harness/front passenger's airbag connector
2 Connector (not relevant)
3 Connector (not relevant)
4 Button
5 Front passenger's airbag connector

2.6 - Test box VAS 5056 (Polo Classic 10.99 >, Polo Estate 10.99 >)

It is possible to check the individual components of the airbag system with test box VAS 5056 and to check which components are actually defective.

Note:

Observe safety measures when working on airbags

=> General body repairs, interior; Repair group 69; Airbag; Safety measures when working on airbag Airbag Safety measures when working on airbag

Protected by copyright. Copying for private or commercial purposes, in part or on whole, is not permitted unless authorised by Volkswagen AG. Volkswagen AG does not guarantee or accept any liability with respect to the correctness of information in this document. Copyright by Volkswagen AG.
satelettronica

Connecting test box to driver's airbag components

- Remove front passenger's airbag unit

=> General body repairs, interior; Repair group 69; Airbag; Removing and installing driver's airbag unit Airbag Removing and installing driver's airbag unit

- Remove steering column switch lower part.

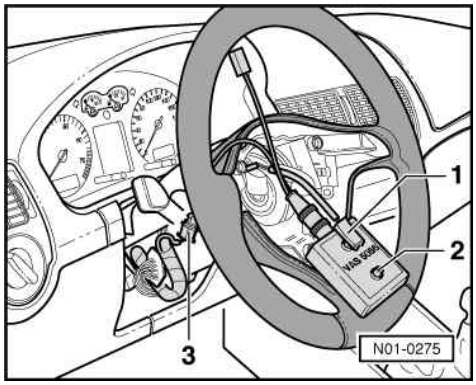

- -> Connect igniter connector to inert igniter -1- and separate wiring harness to coil connector with slip ring. Connect connector -3- from VAS 5056/2 with airbag wiring harness.

  1 - Igniter connector on inert igniter
  2 - Button
  3 - Coil connector with slip ring connector

Protected by copyright. Copying for private or commercial purposes, in part or in whole, is not permitted unless authorised by Volkswagen AG. Volkswagen AG does not guarantee or accept any liability with respect to the correctness of information in this document. Copyright by Volkswagen AG.
satelettronica

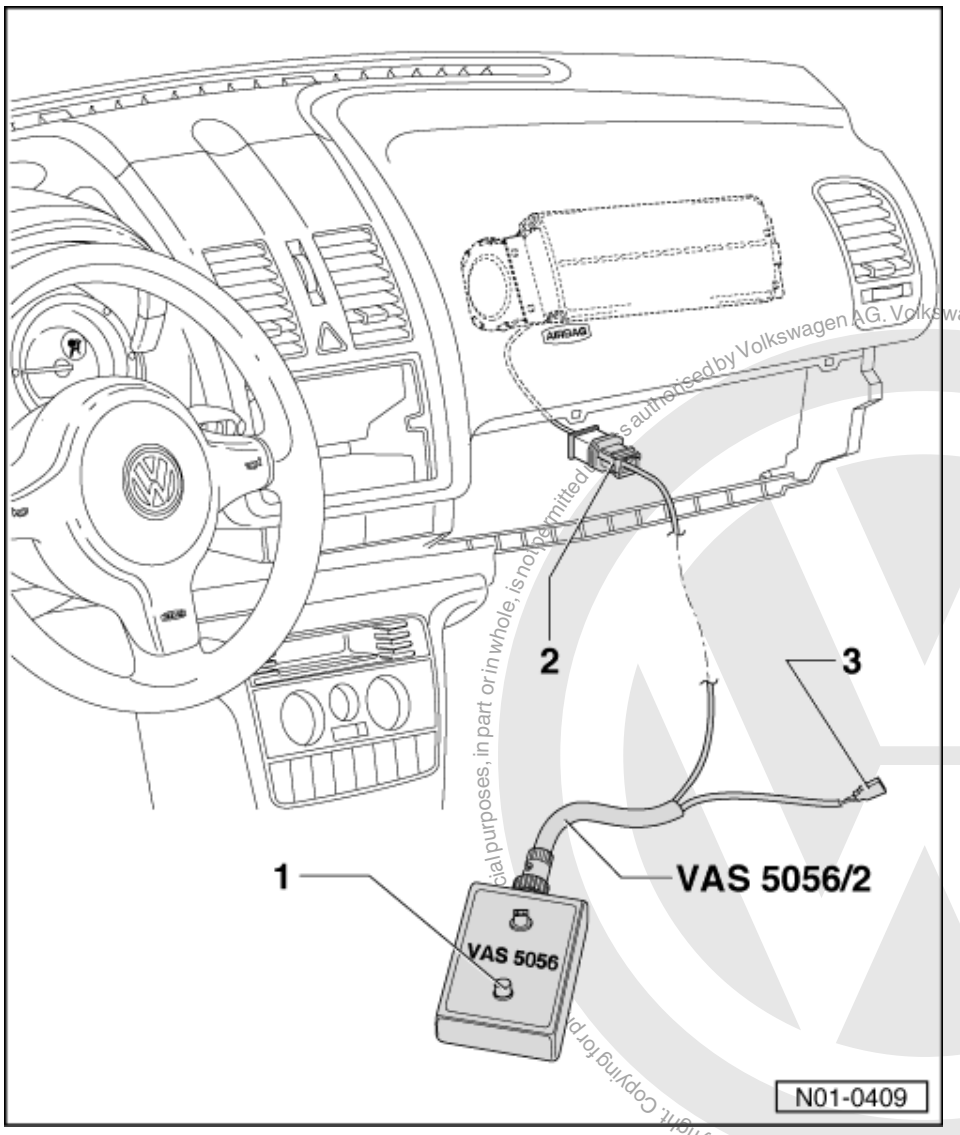

Protected by copyright. Copying for private or commercial purposes, in part or in whole, is not permitted unless authorised by Volkswagen AG. Volkswagen AG does not guarantee or accept any liability with respect to the correctness of information in this document. Copyright by Volkswagen AG.
satelettronica

Connecting test box to passenger's airbag components

- Remove glove box.

=> General body repairs, interior; Repair group 68; Stowage compartments, covers and trims Stowage compartments, covers and trims

- Separate wiring harness to airbag unit and connect yellow 2-pin connector -2- from VAS 5056/2 with wiring harness/front passenger's airbag.

1 Button
2 Wiring harness/passenger's airbag connector
3 Connector (not relevant)

2.7 - Adaption (deactivating and activating front passenger's airbag unit in Caddy, Polo Classic > 09.99, Polo Estate > 09.99)

The front passenger's airbag unit can be deactivated and reactivated using fault reader V.A.G 1551 to enable the use of a child seat on the front passenger seat where the child's back is towards normal direction of travel. As soon as the child seat is no longer required, the front passenger's airbag should be reactivated.

When a front passenger airbag is deactivated, the electrical connection must be disconnected in addition to blocking the control unit software.

The airbag electrical connection for the front passenger airbag must be reconnected before the front passenger airbag is reactivated via the control unit software.

After deactivating or activating the passenger side airbag the registration card (see illustrations catalogue in Technical Service Handbook) must be completed and sent to the relevant distribution centre or importer for registration. Confirmation of the conversion must be entered into service documents.

In Germany, the blocking (deactivating) or reactivation of the system must be checked by an authorised test centre, for example the TÜV and confirmed with an entry in the vehicle documents.

The 2nd registration card must be retained by the customer until the passenger module is reactivated (vehicle wallet).

Deactivating front passenger's airbag

- Connecting fault reader => Page 5 .
- Switch on printer with Print button (warning lamp in button lights up).
- Press keys -1- and -0-.

-> Indicated on display:

```
Rapid data transfer      Q
10 - Adaption
```

- Confirm entry with the Q key.

-> Indicated on display:

```
Adaption
Enter channel number XX
```

- Press keys -0- and -1- and confirm with Q key.

-> Indicated on display:

```
Channel 1     Adaption 0
P. airbag activated     WSC 01948
```

- Press ⇒key.

-> Indicated on display:

```
Channel 1     Adaption 0     Q
Enter adaptation value XXXXX
```

- Enter 00001 and confirm with Q key.

-> Indicated on display:

```
Channel 1     Adaption 1
P. airbag blocked     WSC 01948
```

- Press ⇒key.

-> Indicated on display:

Protected by copyright. Copyright by Volkswagen AG.
Copyright by Volkswagen AG, Wolfsburg. All rights reserved. Distribution and reproduction not permitted without authorisation. Non-commercial use only in the private sphere permitted. No guarantee for accuracy and completeness of information in this document.
satelettronica

```
Channel 1     Adaption 1     Q
Store changed value?
```

- Confirm entry with the Q key.

-> Indicated on display:

```
Channel 1     Adaption     1
Amended value is stored
```

- Press ⇒key.

-> Indicated on display:

```
Rapid data transfer     HELP
Select function XX
```

- Press keys -0- and -6- to end output.

-> Indicated on display:

```
Rapid data transfer     Q
06 End output
```

- Confirm entry with the Q key.

The airbag (K75) warning lamp goes out.

-> Indicated on display:

```
Rapid data transfer     HELP
Enter address word XX
```

- Switch off ignition.
- Separate connection to fault reader V.A.G 1551.

In addition to the blocking of the software side of the front passenger airbag there is also the requirement to disconnect the wiring connector to the front passenger airbag module and fit a vehicle specific resistor in the connector.

Repair kit 1H0 998 521B for the conversion is required.

Warning!
Disconnect battery earth strap before working on the electrical system.

Warning!
The mechanic must electrostatically discharge him/herself before the airbag system is touched. This is done by touching an earthed metal object such as water pipe, heater pipe or metal support etc.

- Remove front passenger's airbag unit without separating connections and earth lead.

=> General body repairs, interior; Repair group 69; Airbag; Removing and installing front passenger's airbag unit (Caddy, Polo Classic ‣ 09.99, Polo Estate ‣ 09.99) Airbag Removing and installing front passenger's airbag unit (Caddy, Polo Classic ‣ 09.99, Polo Estate ‣ 09.99)

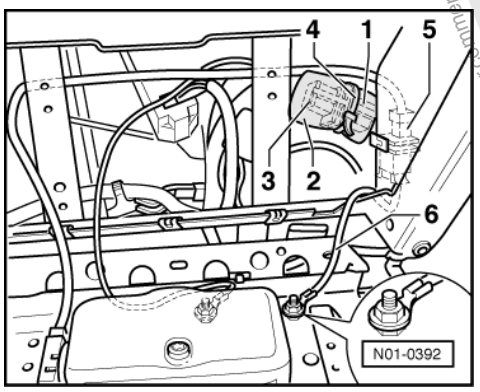

Protected by copyright. Copying for private or commercial purposes, in part or in whole, is not permitted unless authorised by Volkswagen AG. Volkswagen AG does not guarantee or accept any liability with respect to the correctness of information in this document. Copyright by Volkswagen AG.
satelettronica

- -> Bolt cable set -6- with eye ring to housing for front passenger's airbag unit.
- Separate connector for front passenger's airbag unit and connect connector -5- (airbag side) with cable set -6-.
- Insert connector housing -3- (blue resistance connector) from repair kit 1H0 998 521B into connector -1- for front passenger's airbag (body side).
- Secure connector housing -3- (blue resistance connector) and connector -1- with foam tube -2- and cable tie -4- rattle-free from repair set 1H0 998 521B).

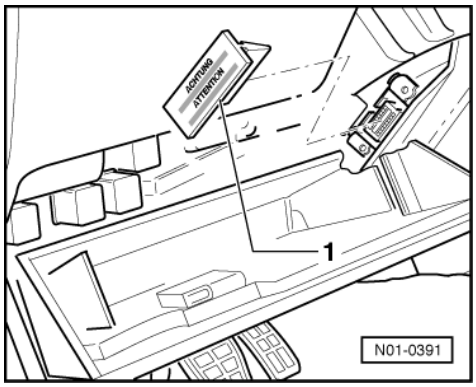

- Install front passenger's airbag unit.

=> General body repairs, interior; Repair group 69; Airbag; Removing and installing front passenger's airbag unit (Caddy, Polo Classic ‣ 09.99, Polo Estate ‣ 09.99) Airbag Removing and installing front passenger's airbag unit (Caddy, Polo Classic ‣ 09.99, Polo Estate ‣ 09.99)

Older vehicles

- -> Insert notice plate -1- into diagnostic connector (notice plate remains in vehicle until front passenger airbag is reactivated).

Newer vehicles

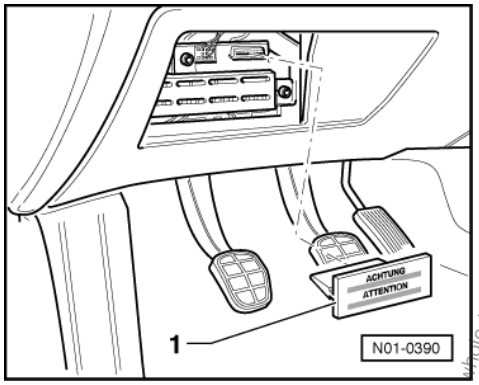

- -> Insert notice plate -1- into diagnostic connector (notice plate remains in vehicle until front passenger airbag is reactivated).
- Switch on ignition.

The warning lamp (K75) lights up at first for approx. 4 seconds and then flashes for a further approx. 15 seconds. This signalizes that the front passenger's airbag is switched off.

satelettronica
Copyright by Volkswagen AG. Volkswagen AG does not guarantee or accept any liability with respect to the correctness of information in this document. Copying for private or commercial purposes, in part or in whole, is not permitted unless authorised by Volkswagen AG.

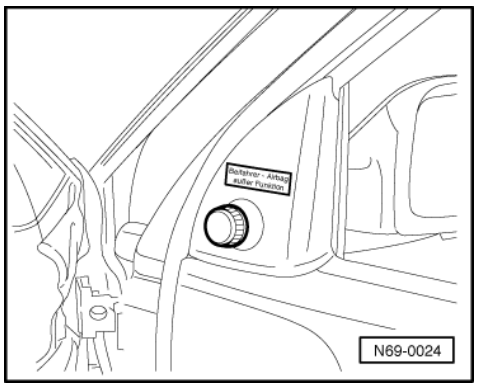

- -> Stick label (Passenger airbag disabled) to mirror cover and passenger door.

Activating front passenger's airbag

- Reinstate electrical connection for front passenger's airbag first.

Warning!
Disconnect battery earth strap before working on the electrical system.

Warning!
The mechanic must electrostatically discharge him/herself before the airbag system is touched. This is done by touching an earthed metal object such as water pipe, heater pipe or metal support etc.

- Remove front passenger's airbag unit

=> General body repairs, interior; Repair group 69; Airbag; Removing and installing front passenger's airbag unit (Caddy, Polo Classic ‣ 09.99, Polo Estate ‣ 09.99) Airbag Removing and installing front passenger's airbag unit (Caddy, Polo Classic ‣ 09.99, Polo Estate ‣ 09.99)

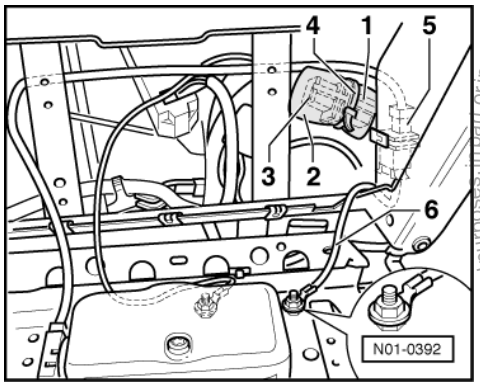

- -> Separate cable tie -4- and free airbag wiring harness.
- Separate connector housing (blue resistance connector) -3- from connector -1-. (Connector housing -3- will not be reinstalled).
- Separate connector -5- (airbag side) from cable set -6- and connect to connector -1-.
- Remove foam pipe from wiring harness.
- Unbolt cable set -6- with eye ring from housing for front passenger's airbag unit.
- Install front passenger's airbag unit.

=> General body repairs, interior; Repair group 69; Airbag; Removing and installing front passenger's airbag unit (Caddy, Polo Classic ‣ 09.99, Polo Estate ‣ 09.99) Airbag Removing and installing front passenger's airbag unit (Caddy, Polo Classic ‣ 09.99, Polo Estate ‣ 09.99)

Protected by copyright. Copyright by Volkswagen AG.
Copyright by Volkswagen AG. Volkswagen AG does not guarantee or accept any liability with respect to the correctness of information in this document.
Copyright by Volkswagen AG. Volkswagen AG does not guarantee or accept any liability with respect to the correctness of information in this document. Copyright by Volkswagen AG.
satelettronica

Protected by copyright. Copying for private or commercial purposes, in part or in whole, is not permitted unless authorised by Volkswagen AG. Volkswagen AG does not guarantee or accept any liability with respect to the correctness of information in this document. Copyright by Volkswagen AG.

Older vehicles

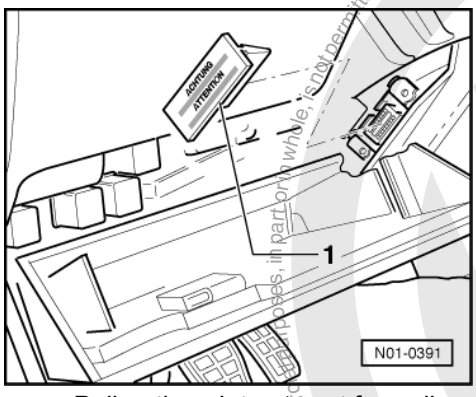

- -> Pull notice plate -1- out from diagnosis connector (notice plate is no longer required).

Newer vehicles

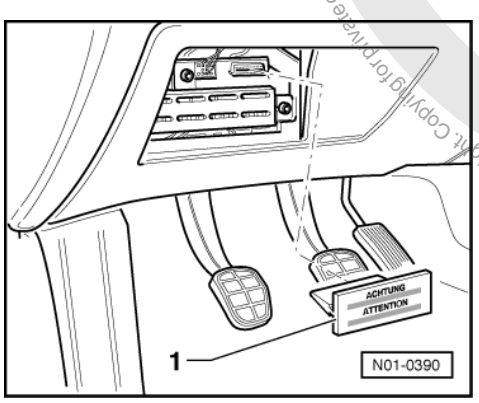

- -> Pull notice plate -1- out from diagnosis connector (notice plate is no longer required).
- Connecting fault reader => Page 5 .
- Switch on printer with Print button (warning lamp in button lights up).
- Press keys -1- and -0-.

-> Indicated on display:

```
Rapid data transfer     Q
10 - Adaption
```

- Confirm entry with the Q key.

-> Indicated on display:

```
Adaption
Enter channel number XX
```

- Press keys -0- and -1- and confirm with Q key.

-> Indicated on display:

```
Channel 1     Adaption 1
P. airbag blocked     WSC 01948
```

- Press ⇒key.

-> Indicated on display:

```
Channel 1.........Adaption     1
Enter matching value XXXXX
```

- Enter 00000 and confirm with Q key.

-> Indicated on display:

satelettronica

Protected by copyright. Copyright by Volkswagen AG. Volkswagen AG does not guarantee or accept any liability with respect to the correctness of information in this document. Copyright by Volkswagen AG. Protected by copyright. Copying for private or commercial purposes, in part or in whole, is not permitted unless authorised by Volkswagen AG.

```
Channel 1      Adaption 0      Q
P. airbag activated      WSC 01948
```

- Confirm entry with the Q key.

-> Indicated on display:

```
Channel 1      Adaption 0      Q
Store changed value?
```

- Confirm entry with the Q key.

-> Indicated on display:

```
Channel 1      Adaption 0
Changed value is stored
```

- Press -> key.

-> Indicated on display:

```
Rapid data transfer      HELP
Select function XX
```

- Press keys -0- and -6- to end output.

-> Indicated on display:

```
Rapid data transfer      Q
06 End output
```

- Confirm entry with the Q key.

The airbag (K75) warning lamp goes out.

-> Indicated on display:

```
Rapid data transfer      HELP
Enter address word XX
```

- Switch off ignition.
- Separate connection to fault reader V.A.G 1551.
- Switch on ignition.

The airbag warning lamp (K75) lights up and must go out after approx. 4 seconds.

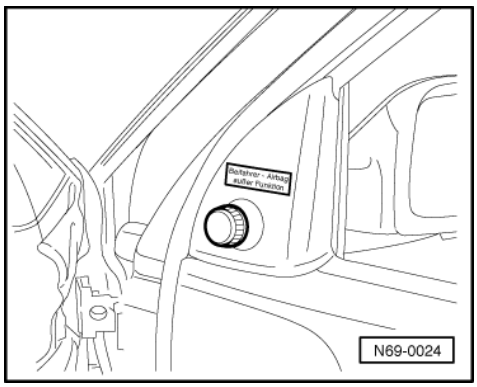

- -> Remove label (Passenger airbag disabled) from passenger door.

satelettronica

2.8 - Adaption (deactivating and activating airbags in Polo Classic 10.99 >, Polo Estate 10.99 >)

The airbags and belt tensioners can be deactivated or activated in the adaption mode.

If airbags or belt tensioners are to be deactivated in a vehicle, apart from the deactivation permission must be obtained from the manufacturer (customer support).

For example, to enable the use of a rear-facing child seat on the front passenger seat, the front passenger's airbag unit can be deactivated using fault reader V.A.G 1551. As soon as the child seat is no longer required, the front passenger's airbag should be reactivated.

When a front passenger airbag is deactivated, the electrical connection must be disconnected in addition to blocking the control unit software.

The airbag electrical connection for the front passenger airbag must be reconnected before the front passenger airbag is reactivated via the control unit software.

It is necessary to install a vehicle specific resistance connector on vehicles with an airbag control unit version less than VW5, with the exception of control units VW3 Part No. 1J0 909 609 (interrogate control unit version => Page 7). (For VW5 control units and higher and VW3 control units Part No. 1J0 909 609 a resistance connector is not necessary).

Repair kit 6X0 998 521 is required for converting control units which are less than version VW5, with exception of control units VW3 Part No. 1J0 909 609.

After the airbag unit is deactivated or activated, the registration card (see illustrations catalogue in Technical Service Handbook) must be completed and sent to the relevant distribution centre or importer for registration. Confirmation of the conversion must be entered into service documents.

In Germany, the blocking (deactivating) or reactivation of the system must be checked by an authorised test centre, for example the TÜV and confirmed with an entry in the vehicle documents.

The 2nd registration card must be retained by the customer until the passenger module is reactivated (vehicle wallet).

Deactivating

- Connecting fault reader => Page 5 .
- Switch on printer with Print button (warning lamp in button lights up).
- Press keys -1- and -0-.

-> Indicated on display:

```
Rapid data transfer      Q
10 - Adaption
```

- Confirm entry with the Q key.

-> Indicated on display:

```
Adaption
Enter channel number XX
```

- Press keys -0- and -1- and confirm with Q key.

-> Indicated on display:

```
Channel 1     Adaption 0
P. airbag activated     WSC 01948
```

- Press ⇒key.

-> Indicated on display:

Protected by copyright. Copying for private or commercial purposes, in part or in whole, is not permitted unless authorised by Volkswagen AG. Volkswagen AG does not guarantee or accept any liability with respect to the correctness of information in this document. Copyright by Volkswagen AG.
satelettronica

```
Channel 1     Adaption 0     Q
Enter adaptation value XXXXX
```

- Enter 00001 and confirm with Q key.

-> Indicated on display:

```
Channel 1     Adaption 1
P. airbag blocked     WSC 01948
```

- Press ⇒key.

-> Indicated on display:

```
Channel 1     Adaption 1     Q
Store changed value?
```

- If the value is to be stored confirm entry with Q key.
- If the value is not to be stored then erase entry with C key. On the display appears the previous value.

-> Indicated on display:

```
Channel 1     Adaption     1
Amended value is stored
```

- Press ⇒key.

-> Indicated on display:

```
Rapid data transfer     HELP
Select function XX
```

- Press keys -0- and -6- to end output.

-> Indicated on display:

```
Rapid data transfer     Q
06 End output
```

- Confirm entry with the Q key.

The airbag (K75) warning lamp goes out.

-> Indicated on display:

```
Rapid data transfer     HELP
Enter address word XX
```

- Switch off ignition.

In addition to the blocking of the software side of the front passenger airbag there is also the requirement to disconnect the wiring connector to the front passenger airbag module and for an airbag control unit version less than VW5, with exception of control units VW3 Part No.1J0 609 909, it is necessary to fit a vehicle specific resistor.

Repair kit 6X0 998 521B for the conversion is required.

Warning!
Disconnect battery earth strap before working on the electrical system.

Warning!
The mechanic must electrostatically discharge him/herself before the airbag system is touched. This is done by touching an earthed metal object such as water pipe, heater pipe or metal support etc.

- Remove glove box.

Protected by copyright. Copying for private or commercial purposes, in part or in whole, is not permitted unless authorised by Volkswagen AG. Volkswagen AG does not guarantee or accept any liability with respect to the correctness of information in this document. Copyright by Volkswagen AG.
satelettronica

=> General body repairs, interior; Repair group 68; Compartments, covers and trims Compartments, covers and trims

Vehicles with an airbag control unit version less than VW5, except control unit VW3 Part No. 1J0 909 609

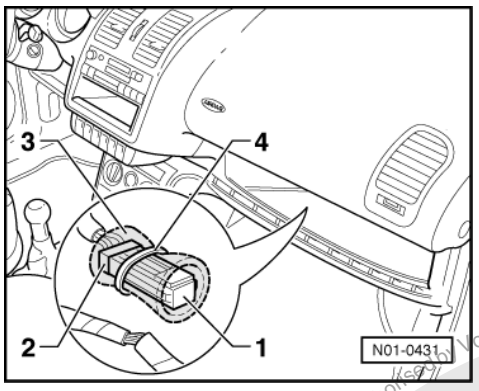

- Remove passenger's airbag unit connector from bracket on airbag and separate.
- -> Insert connector housing -1- from repair kit 6X0 998 521 B into connector -2- to airbag control unit.
- Secure connector housing -1- and connector -2- to airbag wiring harness so that it does not rattle (use foam tube -3- and cable tie -4- from repair kit).
- Install glove box.

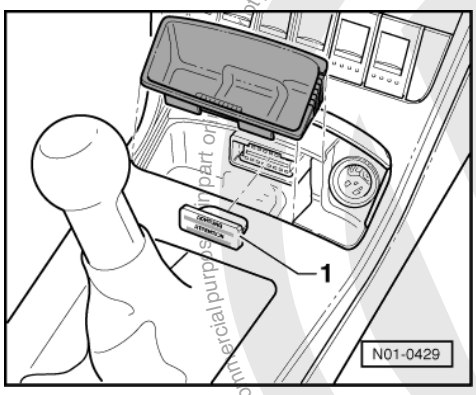

- -> Insert notice plate -1- into diagnostic connector (notice plate remains in vehicle until front passenger airbag is reactivated).
- Switch on ignition.
- Reconnect battery earth strap.

The warning lamp (K75) lights up at first for approx. 4 seconds and then flashes for a further approx. 15 seconds. This signalizes that the front passenger's airbag is switched off.

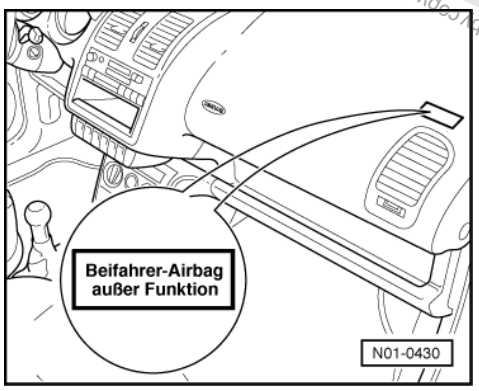

- -> Attach sticker -1- (Front passenger airbag deactivated) above air vent -2- on dash panel.

Vehicles with an airbag control unit version VW5 or higher and VW3 control unit Part No. 1J0 909 609

- Remove passenger's airbag unit connector from bracket on airbag and separate.
- Secure detached airbag wiring harness connector so that it does not rattle.

Protected by copyright. Copying for private or commercial purposes, in part or in whole, is not permitted unless authorised by Volkswagen AG. Volkswagen AG does not guarantee or assume any liability with respect to the correctness of information in this document. Copyright by Volkswagen AG.
satelettronica

- Install glove box.

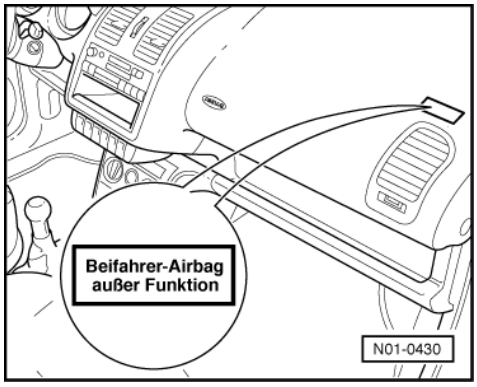

- Switch on ignition.
- Reconnect battery earth strap.

The warning lamp (K75) lights up at first for approx. 4 seconds and then flashes for a further approx. 15 seconds. This signalizes that the front passenger's airbag is switched off.

- -> Attach sticker -1- (Front passenger airbag deactivated) above air vent -2- on dash panel.

Activating front passenger's airbag

- Remove glove box.

=> General body repairs, interior; Repair group 68; Compartments, covers and trims Compartments, covers and trims

Warning!
Disconnect battery earth strap before working on the electrical system.

Warning!
The mechanic must electrostatically discharge him/herself before the airbag system is touched. This is done by touching an earthed metal object such as water pipe, heater pipe or metal support etc.

Vehicles with an airbag control unit version less than VW5, except control unit VW3 Part No. 1J0 909 609

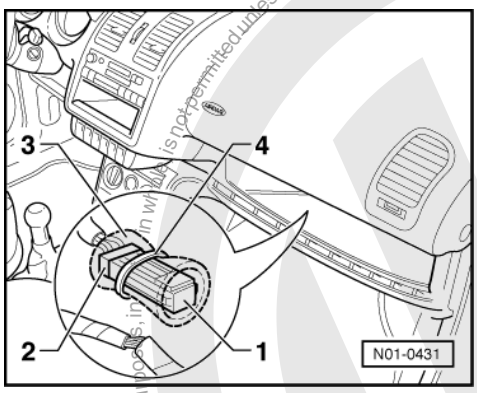

- -> Separate cable tie -4- and free airbag wiring harness.
- Disconnect connector housing -1- from connector -2-.
- Connect front passenger's airbag unit connector and attach to bracket.
- Install glove box.

=> General body repairs, interior; Repair group 68; Compartments, covers and trims Compartments, covers and trims

satelettronica
Protected by copyright. Copying for private or commercial purposes, in whole or in part, is not permitted unless authorised by Volkswagen AG. Volkswagen AG does not guarantee or accept any liability with respect to the correctness of information in this document. Copyright by Volkswagen AG.

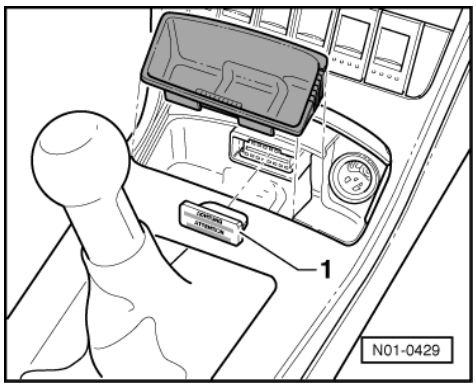

- -> Pull notice plate -1- out from diagnosis connector (notice plate is no longer required).

Vehicles with an airbag control unit version VW5 or higher and VW3 control unit Part No. 1J0 909 609

- Loosen fastening for the removed passenger's airbag connector and remove.
- Connect front passenger's airbag unit connector and attach to bracket.
- Install glove box.

=> General body repairs, interior; Repair group 68; Compartments, covers and trims Compartments, covers and trims

Continuation of all vehicles

- Connecting fault reader => Page 5 .

-> Indicated on display:

```
Rapid data transfer      HELP
Select function XX
```

- Press keys -1- and -0-.

-> Indicated on display:

```
Rapid data transfer      Q
10 - Adaption
```

- Confirm entry with the Q key.

-> Indicated on display:

```
Adaption
Enter channel number XX
```

- Press keys -0- and -1- and confirm with Q key.

-> Indicated on display:

```
Channel 1     Adaption 1
P. airbag blocked     WSC 01948
```

- Press ⇒key.

-> Indicated on display:

```
Channel 1     Adaption 1     Q
Enter matching value XXXXX
```

- Enter 00000 and confirm with Q key.

-> Indicated on display:

```
Channel 1     Adaption 0     Q
P. airbag activated     WSC 01948
```

Protected by copyright. Copying for private or commercial purposes, in part or in whole, is not permitted unless authorised by Volkswagen AG. Volkswagen AG does not guarantee or accept any liability with respect to the correctness of information in this document. Copyright by Volkswagen AG.
satelettronica

- Confirm entry with the Q key.

-> Indicated on display:

```
Channel 1     Adaption 0     Q
Store changed value?
```

- If the value is to be stored confirm entry with Q key.
- If the value is not to be stored then erase entry with C key. On the display appears the previous value.

-> Indicated on display:

```
Channel 1     Adaption 0
Changed value is stored
```

- Press ⇒key.

-> Indicated on display:

```
Rapid data transfer     HELP
Select function XX
```

- Press keys -0- and -6- to end the output.

-> Indicated on display:

```
Rapid data transfer     Q
06 End output
```

- Confirm entry with the Q key.

The airbag warning lamp (K75) goes out.

-> Indicated on display:

```
Rapid data transfer     HELP
Enter address word XX
```

- Switch off ignition.
- Separate connection to fault reader V.A.G 1551.
- Switch on ignition.

The airbag warning lamp (K75) lights up and must go out after approx. 4 seconds.

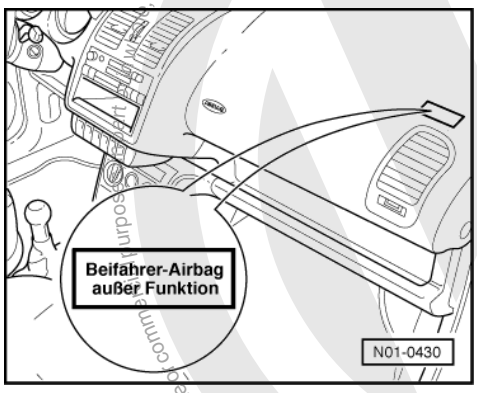

- -> Pull sticker "front passenger airbag inoperative" off dash panel.

2.9 - Final control diagnosis 10.99 >

The function "Crash output" is checked with Final Control Diagnosis.

satelettronica
Volkswagen AG. Volkswagen AG does not guarantee or accept any liability with respect to the correctness of information in this document. Copyright by Volkswagen AG. Rejected by copyright. Not permitted for commercial purposes.

When airbags are ignited the central locking is switched to "unlock" and the interior lights are switched "on".

Notes:

- Before performing the Final Control Diagnosis, switch central locking to "lock" (operate interior switch).
- Switch interior light switch to position "door contact".
- Start engine.
- After completing the Final Control Diagnosis the central locking controls are not active until the ignition has been switched off and on again.

Perform function "03 Final Control Diagnosis"

- Connecting fault reader => Page 5 .

-> Indicated on display:

```
Rapid data transfer      HELP
Select function XX
```

- Press keys 0 and 3

-> Indicated on display:

```
Rapid data transfer      Q
03 Final control diagnosis
```

- Confirm entry with the Q key.

-> Indicated on display:

```
Final control diagnosis      -
Unlock central locking signal
```

The engine stops, the central locking must switch to "unlock" and the interior lights must switch "on".

-> Indicated on display:

```
Final control diagnosis      -
END
```

- Press ⇒key.

3 - Self-diagnosis for convenience system 10.99 >

3.1 - Self-diagnosis for convenience system 10.99 >

3.2 - Functional description

The central locking operates pneumatically.

The locking units located in the doors (door locks) have positioning elements, which are controlled by a dual pressure pump.

The positioning elements lock the doors. After locking at an external lock (door lock, tailgate, radio remote control) the vehicle is protected against theft. The feedback on the respective condition in the control unit occurs via the contact switch in the locking unit.

All the known convenience functions can be performed with the electric convenience system, interior lights control, ATA with interior monitoring (see description of system on page 38), electric windows, mirror and the radio remote control.

Copyright by Volkswagen AG. Volkswagen AG does not guarantee or accept any liability with respect to the correctness of information in this document. Copyright by Volkswagen AG. Copying for private or commercial purposes, in part or in whole, is not permitted unless authorised by Volkswagen AG.
satelettronica

If the airbag control unit is triggered, a signal is sent to the convenience control unit to unlock the doors.

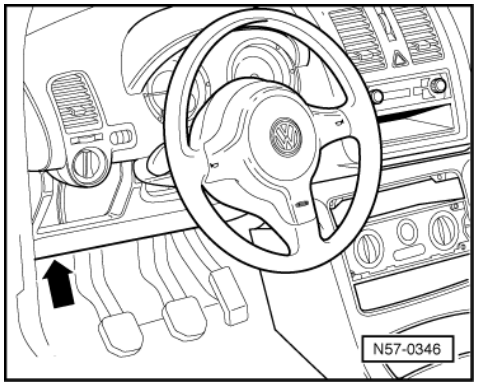

-> The convenience system control unit (J393) is located under the dash panel -arrow- and is secured with a bracket under the relay carrier. It is equipped with a fault memory. The self-diagnosis connection is located in the centre console.

The control unit recognizes faults and malfunctions in the central locking convenience system (convenience system includes central locking, anti-theft alarm, radio wave remote control) and stores them in a non-volatile memory.

Testers V.A.G 1551 and 1552 can be used to interrogate the fault memories and code the control units as well as the function self-diagnosis of the VAS 5051.

The fault information displayed is used to refer to a fault table with notes on the possible causes for directed repair measures.

Faults which can be attributed to a temporary open circuit in the wiring or a loose contact, will also be stored. These faults will be displayed as sporadic faults "SP".

Only statistical faults are considered:

- Central locking inoperative

Note:

Before changing a component erase fault memory, perform functional checks and interrogate fault memory again.

3.3 - Determining which source has possibly triggered the anti-theft alarm

The breakdown of the display content illustrated on Page 54 for the display group number 15 gives information as to which component triggered the alarm system last, and can therefore help the fault finding/ rectification.

This "fault memory" cannot be erased.

3.4 - Description of the interior monitoring system

The interior monitoring system is an integral part of the anti-theft alarm system. The system consists of two sensors which are built into head liner above the B-pillar.

Protected by copyright. Copying for private or commercial purposes, in part or in whole, is not permitted unless authorised by Volkswagen AG. Volkswagen AG does not guarantee or accept any liability with respect to the correctness of information in this document. Copyright by Volkswagen AG.
satelettronica

The interior sensors work on the ultrasonic wave principle. The alarm of the anti-theft alarm system will be triggered if movement is detected in the interior when the system is active.

The interior monitoring can be disabled as follows:

- By pressing the button in pillar B. To do this, switch off ignition, remove key, press button in pillar B and lock car.
- By means of adaption (function 10, channel number 05). This adaption function is intended to change the function so that by locking twice, the ATA remains active but the IMS is disabled.
- By pressing the lock button twice on the radio remote control.
- By locking the car twice with the ignition key.

The IMS will be switched on again the next time the vehicle is unlocked.

A waiting time of at least 30 seconds must be observed before commencing tests when the vehicle is locked.

3.5 - Initiating self-diagnosis for the convenience system

Test prerequisites:

- Voltage supply and fuses S111 and S144 for the respective system OK.
- To initiate the self-diagnosis the ignition must be switched on "Terminal 15 on".

Notes:

- If the display remains blank, check V.A.G 1551 voltage supply according to current flow diagram.

=> Current flow diagrams, Electrical fault finding and Fitting locations binder

- Additional operating information can be printed out depending on the programme by pressing the HELP key of V.A.G 1551.
- The ⇒key is used for advancing the programme sequence.
- The PRINT key is used for switching on the printer (warning lamp in key lights up).

- Connect fault reader => Page 2 .
- Switch on ignition.
- Switch on printer with Print button (warning lamp in button lights up).
- Press key -1- for "Rapid data transfer" mode.

-> Indicated on display:

```
Rapid data transfer      HELP
Enter address word XX
```

Address word for the convenience system: 46

-> Indicated on display:

```
Rapid data transfer      HELP
Enter address word XX
```

- Press keys -4- and -6-.

-> Indicated on display after entering the address word 46:

```
Rapid data transfer      Q
46 Convenience system
```

- Confirm entry with the Q key.

and then the following appears in the display:

-> Indicated on display:

satelettronica

```
Rapid data transfer
Tester sends the address word 46
```

-> Will appear briefly in display:

```
Please wait
```

and then the following appears in the display:

-> The control unit identification of the central control unit (Conv. cent. CU) will be shown on the fault reader V.A.G 1551 display, e.g.:

```
6N0959799 7C Conv. cent. CU      0001
Coding XXXXX     WSC XXXXX
```

At this point the programme can be advanced with the C key to the option "Rapid data transfer, select function".

- Press ⇒key.

-> Indicated on display:

```
Rapid data transfer     HELP
Select function XX
```

3.6 - Overview of the selectable functions

	Page
01 - Interrogating control unit version	56
02 - Interrogating fault memory	
03 - Final control diagnosis	
05 - Erasing fault memory	
06 - Ending output	
07 - Coding control unit	
08 - Read measured value block	
10 - Adaption	

Notes:

- A list of possible functions is printed out after pressing the HELP key.
- Do not select further functions, which can be printed out after pressing the HELP key.
- After the function is completed the V.A.G 1551 returns to the following start position:

-> Indicated on display:

```
Rapid data transfer     HELP
Select function XX
```

3.7 - Interrogating control unit version

- Connecting fault reader => Page 39 .
- Switch on ignition.
- Press key -1- for "Rapid data transfer" mode.
- Switch on printer with Print button (warning lamp in button lights up).
- Press keys -0- and -1-.

-> Indicated on display:

```
Rapid data transfer     Q
01-Interrogating control unit version
```

- Confirm entry with the Q key.

-> Will appear briefly in display:

Protected by copyright. Copying for private or commercial purposes, in part or whole, is not permitted unless authorised by Volkswagen AG. Volkswagen AG does not guarantee or accept any liability with respect to the correctness of information in this document.
© Copyright by Volkswagen AG.
satelettronica

```
Please wait
```

and then the following appears in the display:

-> The control unit identification of the convenience central control unit (Conv. cent. CU) will be shown on the fault reader V.A.G 1551 display, e.g.:

```
6N0959799 7C      Conv. cent. CU
0001
Coding XXXXX      WSC XXXXX
```

Breakdown of the display:

- Top line Part No. of control unit System designation (032) Conv. cent. CU 0001)
- Lower line Code number Dealership number1)

1) Automatically stored in the control unit when interrogating the system.

2) A number or number/letter combination (03 or 6Q, or others) indicate a correct programming of the control unit.

- Press ⇒key.

-> Indicated on display:

```
Rapid data transfer      HELP
Select function XX
```

Notes:

- ```
  Rapid data transfer      HELP
  Control unit does not answer!
  ```

  -> If one of the fault messages opposite appears in the display, the possible causes of the fault can be printed out with the HELP key.

- ```
  Rapid data transfer      HELP
  K wire not switching to positive!
  ```

  -> Ignition must be switched on.

- ```
  Rapid data transfer
  No signal from control unit!
  ```

  -> Faults have occurred at the start of or during the programme (external interference?).

- ```
  Rapid data transfer
  Fault in communication build up
  ```

  -> Check diagnosis wires as well as voltage supply and earth connection.

- Press keys -0- and -6- to end the output.

-> Indicated on display:

```
Rapid data transfer      Q
06 End output
```

- Confirm entry with the Q key.

-> Indicated on display:

```
Rapid data transfer      HELP
Enter address word XX
```

- Switch off ignition.
- Disconnect connector to fault reader V.A.G 1551.

Protected by copyright. Copying for private or commercial purposes, in part or in whole, is not permitted unless authorised by Volkswagen AG. Volkswagen AG does not guarantee or accept any liability with respect to the correctness of information in this document. Copyright by Volkswagen AG.
satelettronica

3.8 - Coding convenience system control unit using fault reader V.A.G 1551

Notes:

- When supplied the control unit is precoded according to the vehicle equipment.
- The coding is performed using the fault reader V.A.G 1551.

- Connecting fault reader => Page 39 .

-> Indicated on display:

```
Rapid data transfer      HELP
Select function XX
```

- Press keys -0- and -7- (with 07 the function "Code control unit" is selected).

-> Indicated on display:

```
Rapid data transfer      Q
07 Code control unit
```

- Confirm entry with the Q key.

-> Indicated on display:

```
Code control unit      Q
Enter code number      XXXXX (0-32767)
```

- Enter code number according to table:

Coding table

Vehicle equipment		Code number
Central locking	All door opening	04097

- Confirm entry with the Q key.

-> The control unit identification number will be displayed with the respective letter index, the code number and the workshop code.

```
6N0959799 7C      Conv. cent. CU
0001□
Coding XXXXX      WSC XXXXX
```

If the contents of the display are as shown then the coding is successful.

If the code number entered is not accepted by the control unit, the previous coding will appear in the display:

-> Indicated on display:

```
6N0959799 7C      Conv. cent. CU
0001□
Coding XXXXX      WSC XXXXX
```

In this case the control unit has not been programmed with the relevant data for the vehicle.
A check must then be completed to see if the correct control unit for the vehicle has been installed (compare Part No. and letter index), or whether an incorrect code number has been entered.

- Repeat coding.

If the control unit cannot be coded (correct control unit, correct code number), the control unit is defective.

Ending function:

- Press ⇒key.

-> Indicated on display:

Volkswagen AG. Volkswagen AG does not guarantee or accept any liability with respect to the correctness of information in this document. Copyright by Volkswagen AG.
satelettronica

```
Rapid data transfer      HELP
Select function XX
```

- Press keys -0- and -6- to end the output.

-> Indicated on display:

```
Rapid data transfer      Q
06 End output
```

- Confirm entry with the Q key.

-> Indicated on display:

```
Rapid data transfer      HELP
Enter address word XX
```

- Switch off ignition.
- Disconnect connector to fault reader V.A.G 1551.

3.9 - Interrogating fault memory

Note:

The vehicle system tester V.A.G 1552 can be used instead of the fault reader V.A.G 1551, however a print-out is not possible.

- Connecting fault reader => Page 39 .
- Switch on printer with Print button (warning lamp in button lights up).

-> Indicated on display:

```
Rapid data transfer      HELP
Select function XX
```

- Press keys -0- and -2- (the function "Interrogate fault memory" is entered with 02).

-> Indicated on display:

```
Rapid data transfer      Q
02 - Interrogate fault memory
```

- Press Print key
- Confirm entry with the Q key.

-> The number of stored faults appears in the display.

```
X faults recognized!
```

The stored faults are displayed and printed out one after the other.

Note:

If a fault is recognised:

- . Rectify fault
- 2. Erase fault memory (function 05).
- 3. Interrogate fault memory again (function 02).

- The faults printed out can be rectified with aid of fault table => from page 45 .
- The function "Read measured value block" => Page 51 are additional aids.

Protected by copyright. Copying for private or commercial purposes, in part or in whole, is not permitted unless authorised by Volkswagen AG. Volkswagen AG does not guarantee or accept any liability with respect to the correctness of information in this document. Copyright by Volkswagen AG.

satelettronica

The measured value block is divided into 17 display group numbers. But only the measured value blocks described in the Workshop Manual are of importance. The assignment of the individual display zones can be taken from the display group overview from Page 51 .

If "No fault recognised" is displayed the programme will return to the initial position after pressing the ⇒ key.

```
No fault recognised!
```

-> Indicated on display:

```
Rapid data transfer      HELP
Select function XX
```

If something else is displayed:

=> Fault reader operating instructions

- Press keys -0- and -6- to end the output.

-> Indicated on display:

```
Rapid data transfer      Q
06 End output
```

- Confirm entry with the Q key.

-> Indicated on display:

```
Rapid data transfer      HELP
Enter address word XX
```

- Switch off ignition.
- Disconnect connector to fault reader V.A.G 1551.

3.10 - Erasing fault memory

Note:

The vehicle system tester V.A.G 1552 can be used instead of the fault reader V.A.G 1551, however a print-out is not possible.

- Connecting fault reader => Page 39 .

Prerequisites:

- Faults are rectified
- Functional check has been carried out
- Fault memory interrogated again

-> Indicated on display:

```
Rapid data transfer      HELP
Select function XX
```

- Press keys -0- and -5- (the function "Erase fault memory" is entered with 05).

-> Indicated on display:

```
Rapid data transfer      Q
05 Erase fault memory
```

- Confirm entry with the Q key.

-> Indicated on display:

Protected by copyright. Copyright by Volkswagen AG. Volkswagen AG does not guarantee or accept any liability with respect to the correctness of information in this document. Copying for private or commercial purposes, in part or in whole, is not permitted unless authorised by Volkswagen AG.
satelettronica

```
Rapid data transfer
Fault memory is erased!
```

- Press ⇒key.

-> Indicated on display:

```
Rapid data transfer     HELP
Select function XX
```

Notes:

```
Warning!
Fault memory was not interrogated
```

-> If this appears in the display, the test sequence is faulty.

- Adhere strictly to test sequence; first of all interrogate fault memory, then erase memory.

- Press keys -0- and -6- to end the output.

-> Indicated on display:

```
Rapid data transfer     Q
06 End output
```

- Confirm entry with the Q key.

-> Indicated on display:

```
Rapid data transfer     HELP
Enter address word XX
```

- Switch off ignition.
- Disconnect connector to fault reader V.A.G 1551.

3.11 - Ending output

- Press keys -0- and -6- to end the output.

-> Indicated on display:

```
Rapid data transfer     Q
06 End output
```

- Confirm entry with the Q key.

-> Indicated on display:

```
Rapid data transfer     HELP
Enter address word XX
```

- Switch off ignition.
- Disconnect connector to fault reader V.A.G 1551.

3.12 - Fault table

Notes:

- The fault table is listed according to the 5 digit fault code on the left.
- Explanation of the fault types (e.g. "open circuit/short circuit to earth"):

=> Fault reader operating instructions

Protected by copyright. Copying for private or commercial purposes, in part or in whole, is not permitted unless authorised by Volkswagen AG. Volkswagen AG does not guarantee or assume any liability with respect to the correctness of information in this document. Copyright by Volkswagen AG.
satelettronica

- Before renewing components indicated as being faulty, check the wiring and connectors to these components as well as the earth connections using current flow diagram. This is particularly relevant if faults are output as "occurring sporadically" (SP).
- The faults displayed can be localised using the test table.

V.A.G 1551 print-out	Possible fault cause	Fault elimination
00000 No fault recognised	If "No fault recognised" appears after carrying out repairs self-diagnosis is ended	
00849 S contact on ignition/starter switch -D Undefined switch condition	- Terminal 15 OK. but S contact defective - Defective wiring or connectors	- Read measured value block; Display group number 010 => Page 51 , Display zone 1
00946 Interior light -W Short to positive	- Defective wiring or connectors - Interior light or one of the reading lights are defective	- Check wiring and connectors using current flow diagram - Renew interior light or defective reading light

V.A.G 1551 print-out	Possible fault cause	Fault elimination
00955 Key 1 Adaption limit exceeded	- Key not adapted - Key operated more than 200 times - beyond range of system	- Read measured value block; display group number 013 => Page 53 , display zone 1...4
00956 Key 2 Adaption limit exceeded		
00957 Key 3 Adaption limit exceeded		
00958 Key 4 Adaption limit exceeded		

V.A.G 1551 print-out	Possible fault cause	Fault elimination
01044 Control unit incorrectly coded	- Control unit installed does not correspond to the vehicle equipment - Control unit supplied is not programmed or not fully programmed	- Renew control unit Inform part supplier of the problem
01131 Turn signal activation Undefined switch position	- Defective wiring or connectors	- Check wiring and connectors using current flow diagram Perform final control diagnosis => Page 48

Protected by copyright. Copying for private or commercial purposes, in part or in whole, is not permitted unless authorised by Volkswagen AG. Volkswagen AG does not guarantee or accept any liability with respect to the correctness of information in this document. Copyright by Volkswagen AG.
satelettronica

V.A.G 1551 print-out	Possible fault cause	Fault elimination
	- Fuse S144 defective	- Check fuses using current flow diagram or renew

V.A.G 1551 print-out	Possible fault cause	Fault elimination
01134 Alarm horn -H12 Undefined switch position	- Defective wiring or connectors - Fuse S111 defective - Alarm horn -H12 defective	- Check wiring and connectors using current flow diagram Perform final control diagnosis => Page 48 - Check fuses using current flow diagram or renew - Renew alarm horn -H12
01135 Interior monitoring sensors Open circuit Defective	- Defective wiring or connectors - Sensors for monitoring interior not installed - Sensors for monitoring interior defective	- Check wiring and connectors using current flow diagram Read measured value block; Display group number 009 = Page 51 , display zone 4 - Check installation - Renew sensors for monitoring interior

V.A.G 1551 print-out	Possible fault cause	Fault elimination
01179 Incorrect key programming	- Matching of keys (function 10) not performed correctly	- See description for matching keys with remote control, page 53 , display zones 1...41)

1) Number of keys matched ("learnt") will be displayed.

V.A.G 1551 print-out	Possible fault cause	Fault elimination
01330 Central control unit for convenience system -J393 Defective Voltage supply too high Voltage supply too low	- Central control unit for convenience system defective - Voltage regulator C1 defective - Alternator C defective - Battery A defective or discharged	- Renew convenience system central control unit - Check wiring and connectors using current flow diagram Read measured value block; Display group number 014 => Page 53 , display zone 1

V.A.G 1551 print-out	Possible fault cause	Fault elimination
01484 Central locking key button, lock		

Protected by copyright. Copying for private or commercial purposes, in part or in whole, is not permitted unless authorised by Volkswagen AG. Volkswagen AG does not guarantee or accept any liability with respect to the correctness of information in this document. Copyright by Volkswagen AG.

satelettronica

V.A.G 1551 print-out	Possible fault cause	Fault elimination
Short to earth1)	- Defective wiring or connectors	- Check wiring and connectors using current flow diagram
01485 Central locking key button, unlock Short to earth1)	- Defective wiring or connectors	- Check wiring and connectors using current flow diagram

1) Fault recorded if operated for longer than 10 seconds

3.13 - Final control diagnosis

The components displayed in the final control diagnosis can differ depending upon the equipment fitted to the vehicle. For example on vehicles without ATA there will be no step "1" as listed in the table below.

The final control diagnosis activates the following components in the stated sequence:

Step	Display in tester	Reaction
	Alarm horn (for anti-theft alarm)	- Horn sounds continuously
	Turn signal lights activation (for anti-theft alarm)	- Activated continuously (lights up cont.)
	Interior light, reading lights	- Interior and reading lights are activated
	"Safe" LED driver's door	- "Safe" LED lights up
	END	- Information: End of regular final control test

Protected by copyright. Copying for private or commercial purposes, in part or in whole, is not permitted unless authorised by Volkswagen AG. Volkswagen AG does not guarantee or accept any liability with respect to the correctness of information in this document. Copyright by Volkswagen AG.

satelettronica

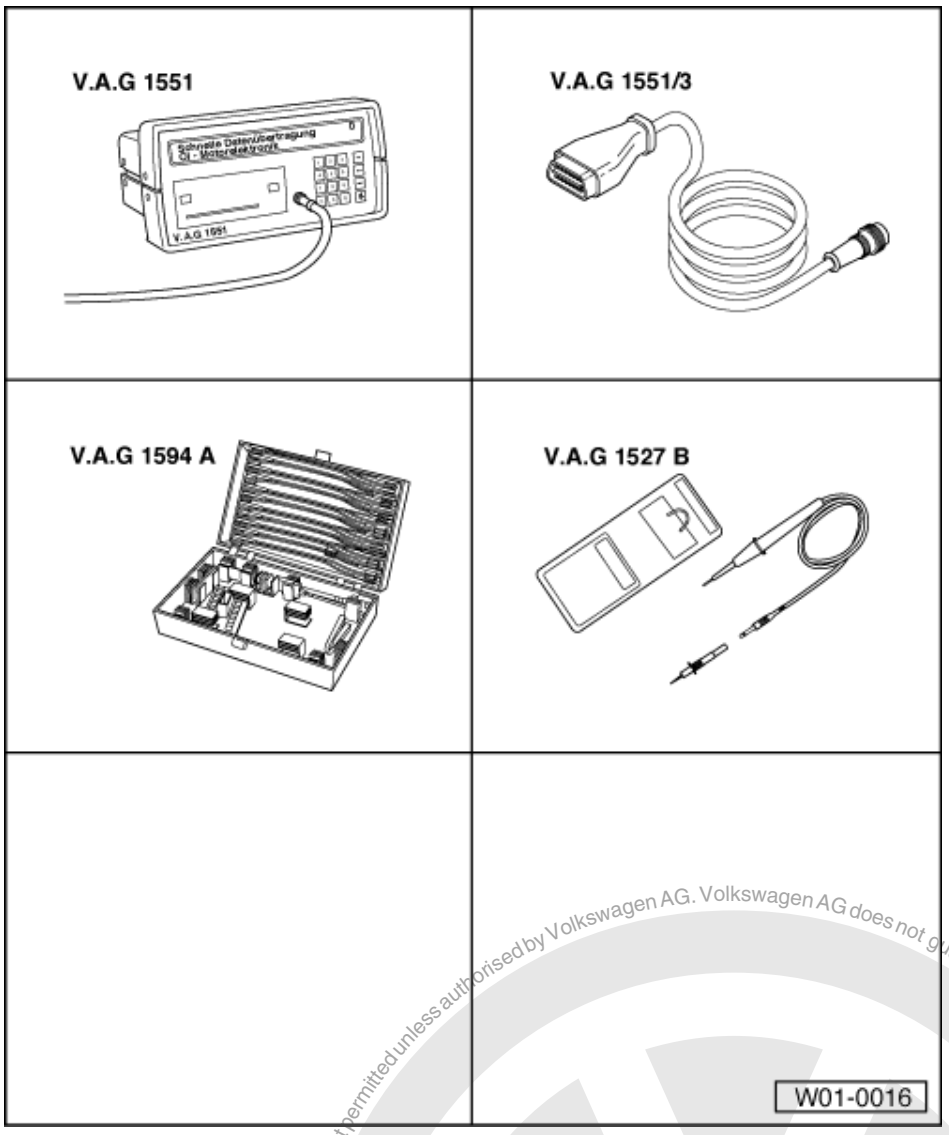

Special tools, workshop equipment, test and measuring appliances and auxiliary items required

- V.A.G 1551 Fault reader
- V.A.G 1551/3 Cable
- V.A.G 1594 A Adapter set
- V.A.G 1527 B Diode test lamp
- Current flow diagram

Work sequence

- Connecting fault reader => Page 39 .

-> Indicated on display:

```
Rapid data transfer      HELP
Select function XX
```

- Operate fault reader taking into account the information on the display:
- Input 03 for "Final control diagnosis" function.
- Switch off ignition and remove ignition key from ignition lock.

-> Indicated on display:

```
Rapid data transfer      Q
03 Final control diagnosis
```

Protected by copyright. Copying for private or commercial purposes, in part or in whole, is not permitted unless authorised by Volkswagen AG. Volkswagen AG does not guarantee or accept any liability with respect to the correctness of information in this document. Copyright by Volkswagen AG.
satelettronica

- Confirm entry with the Q key.

-> Indicated on display:

```
Final control diagnosis
```

Perform press button individual tests: See table on page 48 .

Final control diagnosis can be terminated by pressing the "C" key.

- Press ⇒key.

If a component does not function:

- Continue final control diagnosis to the end.

3.14 - Reading measured value block

- Connecting fault reader => Page 39 .

The measured values in the functions read measured value block and basic setting are described during the individual component test. This table serves only as an overview.

The measured value block is divided into 17 display group numbers. But only the measured value blocks described in the Workshop Manual are of importance. The assignment of the individual display zones can be taken from the display group overview from Page 51 .

-> Indicated on display:

```
Rapid data transfer      HELP
Select function XX
```

- Press keys -0- and -8- (08 initiates the "Read measured value block" function).

-> Indicated on display:

```
Rapid data transfer        Q
08 Read measured value block
```

- Confirm entry with the Q key.

-> Indicated on display:

```
Read measured value block      HELP
Input display group number XX
```

The display group number 001 is an example, to illustrate the sequence.

- Press keys 0, 0 and 1 for "Display group number 1" and confirm entry with Q key.

-> Indicated on display:
(1...4 = Display zones)

```
Read measured value block      1
"
     1    2     3     4
```

Note:

To change to another display group proceed as follows:

Display group	V.A.G 1551	V.A.G 1552
Higher	Press key 3	Press ↑key
Lower	Press key 1	Press ↓key

Protected by copyright. Copying for private or commercial purposes, in part or in whole, is not permitted unless authorised by Volkswagen AG. Volkswagen AG does not guarantee or accept any liability with respect to the correctness of information in this document. Copyright by Volkswagen AG.

satelettronica

Display group	V.A.G 1551	V.A.G 1552
Skip	Press key C	Press key C

- Displayed after pressing C key.

-> Indicated on display:

```
Read measured value block     HELP
Input display group number XXX
```

- Now enter the display group number required.

3.15 - Display group overview

Break down of display content for display group number 009

Display group 009 -Central control unit-						
Read measured value block 9			⇒	◂ Indicated on display		
xxx	xxx	xxx	xxx			
1	2	3	4	◂ Display zones	Specification	Evaluation
				Interior monitor sensor	yes no not installed	=> Page 51
				Remote control unit key button	open, closed, (with 0 or 1)	
		Empty1)				
	Empty1)					

1) Empty means in this case: Display zone is blank

Evaluating display group number 009

Display zone	Description	Display	Rectifying fault
3	Remote control key button	unlock, lock, (with 0 or 1)	- Visual check of wiring Check connectors of corresponding current circuit are located correctly and securely and simultaneously observe the display If the display content does not change during operation, the fault must be rectified or the relevant part renewed Erase fault memory Perform function test Interrogate fault memory again If necessary, re-adapt remote control (function 10, adaption =>Page 56)
4	Interior monitor sensor	yes no not installed	

Break down of display content for display group number 010

Display group 010 -Central control unit-

Protected by copyright. Copying for private or commercial purposes, in part or in whole, is not permitted unless authorised by Volkswagen AG. Volkswagen AG does not guarantee or accept any liability with respect to the correctness of information in this document. Copyright by Volkswagen AG.
satelettronica

Read measured value block 10 ⇒				◂ Indicated on display		
xxx	xxx	xxx	xxx			
1	2	3	4	◂ Display zones	Specification	Evaluation
				Ignition	Terminal 15 on, Terminal 15 off	=> Page 52
				Tailgate key switch	open, closed, not oper. implausible	
			Empty1)			
		S-contact			operated not operated	

1) Empty means in this case: Display zone is blank

Evaluating display group number 010

Display zone	Description	Display	Rectifying fault
	S-contact	operated not operated	- Visual check of wiring Check that connections of relevant current circuit are correctly connected and seated securely whilst simultaneously observing display If the display does not change when operating, rectify fault or renew relevant component Erase fault memory Perform functional check Interrogate fault memory again
	Empty1)		
	Tailgate key switch	open closed not oper. implausible	
	Ignition	Terminal 15 on Terminal 15 off	

1) Empty means in this case: Display zone is blank

Break down of display content for display group number 011

Display group 011 -Central control unit-						
Read measured value block 11 ⇒				◂ Indicated on display		
xxx	xxx	xxx	xxx			
1	2	3	4	◂ Display zones	Specification	Evaluation
				Empty1)		
			Empty1)			
		Boot lid/tailgate contact switch2)			open, closed	=> Page 53
	Bonnet contact switch				open, closed	

1) Empty means in this case: Display zone is blank

2) Lock rotary latch must be engaged in second stage.

Copyright by Volkswagen AG. Volkswagen AG does not guarantee or accept any liability with respect to the correctness of information in this document. Copying for private or commercial purposes, in part or in whole, is not permitted unless authorised by Volkswagen AG.
satelettronica

Evaluating display group number 011

Display zone	Description	Display	Rectifying fault
	Bonnet contact switch	open, closed	- Visual check of wiring Check that connections of relevant current circuit are correctly connected and seated securely whilst simultaneously observing display If the display does not change when operating, rectify fault or renew relevant component Erase fault memory Perform functional check Interrogate fault memory again
	Boot lid/tailgate contact switch1)	open closed	

1) Lock rotary latch must be engaged in second stage.

Break down of display content for display group number 013

Display group 013 -Central control unit-						
Read measured value block 13			⇒	◂ Indicated on display		
xxx	xxx	xxx	xxx			
1	2	3	4	◂ Display zones	Specification	Evaluation
				Key number	mv = display 0...4 0: not operated	=> Page 53
			No measured value			
		No measured value				
	No measured value					

Evaluating display group number 013

Display zone	Description	Display	Rectifying fault
4	Key number	display = 1...41)	When a learnt radio key is operated, the item number of the learnt key is shown. If the tester displays "0" even when the radio button is pressed, this key must be re-learnt using adaption (10)=> Page 56 .

1) A max. of 4 remote controls can be "learnt".

Break down of display content for display group number 014

Display group 014 -Central control unit-						
Read measured value block 14			⇒	◂ Indicated on display		
xxx	xxx	xxx	xxx			
1	2	3	4	◂ Display zones	Specification	Evaluation
				Empty		
			Interior monitoring switch-off1)		on, off, not installed	=>Page 54

Copyright by Volkswagen AG. Volkswagen AG does not guarantee or accept any liability with respect to the correctness of information in this document. Copying for private or commercial purposes, in part or in whole, is not permitted unless authorised by Volkswagen AG.
satelettronica

	Rear lid release button and rear lid handle	not oper. TG.rl op. TG hndl op implausible	
	Vehicle system voltage terminal 30	Volts	

1) Interior monitoring switch-off

Evaluating display group number 014

Display zone	Description	Display	Rectifying fault
	Vehicle system voltage terminal 30	in Volts	- Visual check of wiring Check that connections of relevant current circuit are correctly connected and seated securely whilst simultaneously observing display If the display does not change when operating, rectify fault or renew relevant component Erase fault memory Perform functional check Interrogate fault memory again
	RLR button and RL handle	not operated RLR, RL handle, implausible	
	Interior monitoring switch-off1)	on, off, not installed	

1) Interior monitoring switch-off

Break down of display content for display group number 015

Display group 015 -Central control unit-						
Read measured value block 15 ⇒				◂ Indicated on display		
xxx	xxx	xxx	xxx	◂ Display zones	Specification	Evaluation
1	2	3	4	4. Alarm source (4th last)	Display, see table on page 54	=> Page 54
				3. Alarm source (3rd last)		
				2. Alarm source (penultimate)		
				1. Alarm source (last)		

Break down of display content for display group number 015

Display zone	Description	Display	Rectifying fault
	Alarm source (last)	Display see table below	Only the last 4 ATA1) activations are shown! For example "64" = Bonnet contact switch (see table below for possible sources of alarm)
	Alarm source (penultimate)		
	Alarm source (3rd last)		

Copyright by Volkswagen AG. Volkswagen AG does not guarantee or assume any liability with regard to the correctness of information in this document. Copying for private or commercial purposes, in part or in whole, is not permitted unless authorised by Volkswagen AG.
satelettronica

Display zone	Description	Display	Rectifying fault
	Alarm source (4th last)		

1) Anti-theft alarm

Possible sources of alarm	Display
Boot lid/tailgate contact switch	1
Front passenger, rear left, rear right rotary latch switch	14
Ignition	16
Immobilizer	17
Interior monitoring	32
Bonnet contact switch	64
Driver's rotary latch switch	128
No alarm	255

Break down of display content for display group number 016

Display group 016						
Read measured value block 16			⇒	◂ Indicated on display		
xxx	xxx	xxx	xxx			
1	2	3	4	◂ Display zones	Specification	Evaluation
				Empty1)		=> Page 55
			Empty1)			
		Empty1)				
	Immobilizer key recognition				yes, no, not fitted	

1) Empty means in this case: Display zone is blank

Evaluating display group number 016

Display zone	Description	Display	Rectifying fault
	Immobilizer key recognition	yes, no, not fitted	- Visual check of wiring Watch display and check connectors of appropriate current circuit for correct engagement and tight fit If the display does not change when checking connectors, rectify fault or renew relevant component Erase fault memory Perform functional check Interrogate fault memory again

Break down of display content for display group number 017

Display group 017						
Read measured value block 17			⇒	◂ Indicated on display		
xxx	xxx	xxx	xxx			
1	2	3	4	◂ Display zones	Specification	Evaluation
				Empty1)		=> Page 56
			Remaining door contacts		open, closed	

satelettronica

Protected by copyright. Copying for private or commercial purposes, in part or in whole, is not permitted unless authorised by Volkswagen AG. Volkswagen AG does not guarantee or accept any liability with respect to the correctness of information in this document. Copyright by Volkswagen AG.

	Door contact, driver's side	open, closed	
	Central locking signal	open, closed, not operated, implausible	

1) Empty means in this case: Display zone is blank

Evaluating display group number 017

Display zone	Description	Display	Rectifying fault
	Central locking signal	open, closed, not operated, implausible	- Visual check of wiring Check connectors of corresponding current circuit are located correctly and securely and simultaneously observe the display If the display content does not change during operation, the fault must be rectified or the relevant part renewed Erase fault memory Perform function test Interrogate fault memory again
	Door contact, driver's side	open, closed	
	Remaining door contacts	open, closed	

3.16 - Matching ignition keys to radio remote control

Notes:

- If new or additional ignition keys are required they must be matched to the immobilizer and convenience system control electronics.
- The matching procedure must always be carried out for all the ignition keys, including the existing ones.
- The number of keys already adapted will be displayed when the adaption function is selected.
- With the introduction of this generation of convenience system it is possible to programme additional functions. The functions and the programming are described from Page 59 .
- The matching can be interrupted with the "C" key of the V.A.G 1551.

Warning!
The V.A.G 1551 dealership number (workshop code) will be stored in immobilizer control unit when adapting ignition keys.

Prerequisites

- All ignition keys available. If no old ignition key is available see "Lost key procedure",

=> Electrical system self-diagnosis; Repair group 01; Self-diagnosis for Immobilizer. Self-diagnosis for Immobilizer.

- Key fob with covered secret number is available, if not see "Establishing secret number",

=> Electrical system self-diagnosis; Repair group 01; Self-diagnosis for Immobilizer. Self-diagnosis for Immobilizer.

- Insert correct profile ignition key in the ignition lock.
- Connecting fault reader => Page 39 .

The adaption shown here is only an example.

-> Indicated on display:

satelettronica

```
Rapid data transfer      HELP
Select function XX
```

- Press keys 1 and 0 (10 selects function "Adaption").

-> Indicated on display:

```
Rapid data transfer      Q
10 - Adaption
```

- Confirm entry with the Q key.

-> Indicated on display:

```
Adaption
Enter channel number XX
```

- Press keys 0 and 0 (all keys are erased with channel number 00).
- Confirm entry with the Q key.

Note:

It is not possible to match a new or additional key(s) without erasing existing learnt/matched key(s).

-> Indicated on display:

```
Adaption      Q
Erase learnt values
```

- Confirm entry with the Q key.

-> Indicated on display:

```
Adaption
Learnt values are erased
```

- Press ⇒key.

-> Indicated on display:

```
Rapid data transfer      HELP
Select function XX
```

- Press keys 1 and 0 (10 selects function "Adaption").

-> Indicated on display:

```
Rapid data transfer      Q
10 - Adaption
```

- Confirm entry with the Q key.

-> Indicated on display:

```
Adaption
Enter channel number XX
```

- Press keys 0 and 1 (all keys are "learnt" with channel number 01).

-> Indicated on display:

```
Adaption      Q
Enter channel number 01
```

- Confirm entry with the Q key.

-> Indicated on display:

```
Channel 1.........Adaption     1
Key           1
```

Protected by copyright. Copying for private or commercial purposes, in part or in whole, is not permitted unless authorised by Volkswagen AG. Volkswagen AG does not guarantee or accept any liability with respect to the correctness of information in this document. Copyright by Volkswagen AG.
satelettronica

The top line displays number of keys to be "learnt" (standard =1). Select number of keys with keys 1 and 3.

- Press ⇒key.

-> Indicated on display:

```
Channel 1.........Adaption     1
Enter matching value XXXXX
```

- Press the 0 key four times and then enter the number of all ignition keys to be matched, including the existing key, (e.g. 00003); max. possible Qty. 4.
- Press ⇒key.

-> Indicated on display:
Number of radio wave key to be "learnt".

```
Channel 1     Adaption     3     Q
Key     3
```

- Confirm entry with the Q key.

-> Indicated on display:

```
Channel 1     Adaption     3     Q
Store amended value?
```

- Confirm entry with the Q key.

-> Indicated on display:

```
Channel 1     Adaption     1
Amended value is stored
```

- Press ⇒key.

-> Indicated on display:

```
Rapid data transfer     HELP
Select function XX
```

- A button must be pressed once, for at least 1 second, on each of the radio wave keys to be "learnt" (in example above, 3 keys).

Adaption is confirmed by a beep sound.

- Switch off ignition and remove ignition key.
- Perform functional check (e.g. 3) of radio wave keys.

Note:

All 3 keys (see example) can be "learnt" in one matching sequence.

15 seconds must not be exceeded when matching all ignition keys (pressing a button).

A successful adaption can be determined via Read measured value block, function 08, display group number 013, Page 53 . When operation the radio wave unit both of first measurement values must have the status OK. Simultaneously the last measurement value will show the positional number of the key (i.e. first, second, third, fourth key).

If the remote control key is operated several times the third display -no measured value- changes to "OK".

The adaption of ignition keys is automatically terminated when:

- number of keys to be adapted is reached.
- a button of one of the keys to be "learnt" is pressed frequently.

Protected by copyright. Copying for private or commercial purposes, in part or in whole, is not permitted unless authorised by Volkswagen AG. Volkswagen AG does not guarantee or accept any liability with respect to the correctness of information in this document. Copyright by Volkswagen AG.
satelitonica

◆ Permissible matching period of 15 seconds is exceeded (fault is stored).

- Select function 02 "Interrogate fault memory". If there is no fault stored, the matching of the keys has been successfully completed.
- Press keys -0- and -6- to end the output.

-> Indicated on display:

```
Rapid data transfer      Q
06 End output
```

- Confirm entry with the Q key.

-> Indicated on display:

```
Rapid data transfer      HELP
Enter address word XX
```

- Switch off ignition.
- Disconnect connector to fault reader V.A.G 1551.

3.17 - Matching a new additional key

- Insert a correct profile ignition key (old) in the ignition switch/lock.
- Switch on ignition.
- Lock the vehicle mechanically (driver's door) with a new key (to be learned) and then operate one of the radio wave buttons on the key.
- Then after a pause of more than one second operate the radio wave button on the key a second time.
- The adaption process is completed and will be confirmed by the vehicle horn sounding.

3.18 - Radio remote control functional variations

Channel number	Significance	Measured value
03	Auto lock/unlock: Vehicles will be locked when a speed of 15 km/h is reached	on=1 off= 0
04	Auto lock/unlock: Vehicles will be unlocked when the ignition key is withdrawn from the ignition lock	on=1 off= 0
05	IM switch-off: Interior monitoring is activated or deactivated by operating central locking closed twice	on=1 off= 0
06	Horn sounds when unlocking: Confirmation signal when unlocking1)	on=1 off= 0
07	Horn sounds when locking: Confirmation signal when locking1)	on=1 off= 0
08	Turn signals flash when unlocking: Unlocking is confirmed by turn signals flashing twice	on=1 off= 0
09	Horn sounds when locking: Locking is confirmed by turn signals flashing once	on=1 off= 0
10	Setting for alarm horn: Programming the horn operation when the alarm is triggered appropriate to the legislation of the countries	1= Rest of Europe 2= Germany 3= Great Britain

1) No longer allowed according to German legislation.

The matching shown here is only an example.

-> Indicated on display:

Protected by copyright. Copying for private or commercial purposes, in part or in whole, is not permitted unless authorised by Volkswagen AG. Volkswagen AG does not guarantee or accept any liability with respect to the correctness of information in this document. Copyright by Volkswagen AG.

satelettronica

```
Rapid data transfer     HELP
Select function XX
```

- Press keys 1 and 0 (10 selects function "Adaption").

-> Indicated on display:

```
Rapid data transfer     Q
10 - Adaption
```

- Confirm entry with the Q key.

-> Indicated on display:

```
Adaption
Enter channel number XX
```

- Press keys 0 and 8 (channel number 08 switches the turn signals on or off when unlocking).

-> Indicated on display:

```
Adaption     Q
Enter channel number 08
```

- Confirm entry with the Q key.

-> Indicated on display:

```
Channel 8     Adaption     1
Unlock     Flashing     on
```

- Press ⇒key.

-> Indicated on display:

```
Channel 8........Adaption     1
Enter adaption value XXXXX
```

- Press key 0 five times (e.g. 00000).

-> Indicated on display:

```
Channel 8.........Adaption     0     Q
Enter adaption value 00000
```

- Confirm entry with the Q key.

-> Indicated on display:

```
Channel 8     Adaption     0     Q
Unlock     Flashing     off
```

- Confirm entry with the Q key.

-> Indicated on display:

```
Channel 8     Adaption     0     Q
Store amended value?
```

- Confirm entry with the Q key.

-> Indicated on display:

```
Channel 8     Adaption     0
Amended value is stored
```

- Press ⇒key.

-> Indicated on display:

Protected by copyright. Copying for private or commercial purposes, in part or in whole, is not permitted unless authorised by Volkswagen AG. Volkswagen AG does not guarantee or accept any liability with respect to the correctness of information in this document. Copyright by Volkswagen AG.
satelettronica

```
Rapid data transfer      HELP
Select function XX
```

- Press keys -0- and -6- to end the output.

-> Indicated on display:

```
Rapid data transfer      Q
06 End output
```

- Confirm entry with the Q key.

-> Indicated on display:

```
Rapid data transfer      HELP
Enter address word XX
```

- Switch off ignition.
- Disconnect connector to fault reader V.A.G 1551.

3.19 - Removing and installing batteries for the main key with radio wave remote control

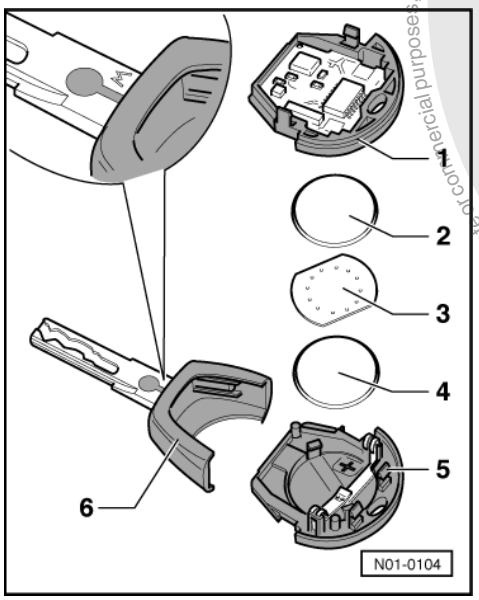

-> - Transmitter unit - upper part (turned-over)
- Button batteries
- Contact plate
- Button battery
- Transmitter unit - lower part
- Main key with variable code transponder

Removing

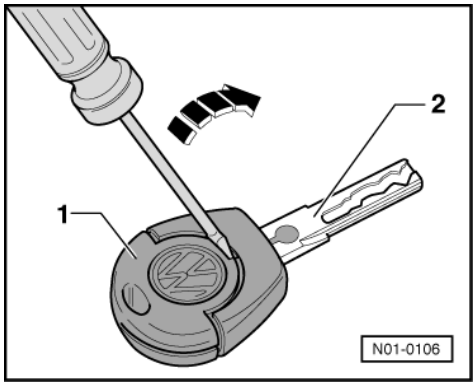

Protected by copyright. Copying for private or commercial purposes, in part or in whole, is not permitted unless authorised by Volkswagen AG. Volkswagen AG does not guarantee or accept any liability with respect to the correctness of information in this document. Copyright by Volkswagen AG.
satelettronica

- -> Insert a screwdriver in the slot between the transmitter unit -1- and the main key -2-.
- Move the screwdriver in direction of arrow and unclip the transmitter unit from the main key.

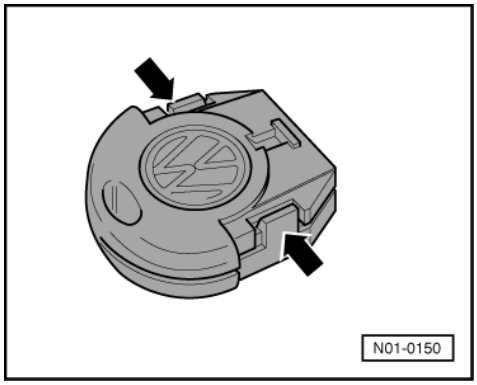

- -> Lever the transmitter unit apart on the two locating lugs -arrows-.

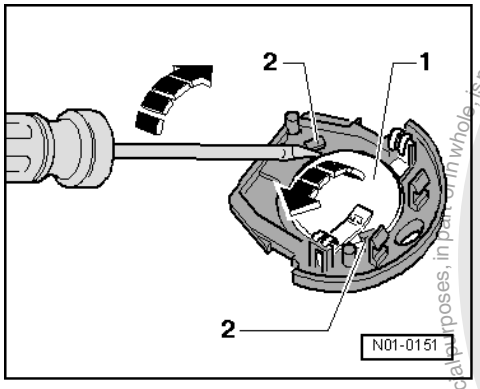

- -> Unclip upper battery -1- from the retainers -2- with a screwdriver in direction of arrow.

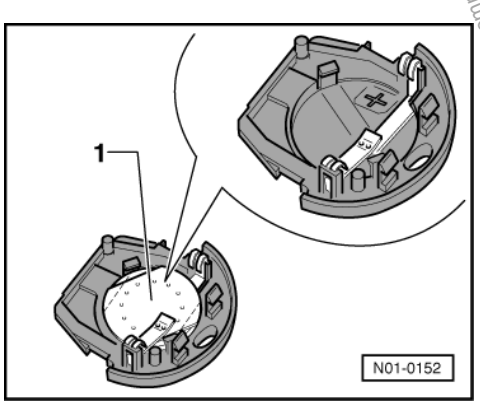

- -> The contact plate -1- has two straight edges. When these edges are turned towards the retainers the contact plate can be removed.
- The contact plate can also be unclipped with a screwdriver.
- Now unclip the lower battery from the retainers with a screwdriver.

Protected by copyright. Copying for private or commercial purposes, in part or in whole, is not permitted unless authorised by Volkswagen AG. Volkswagen AG does not guarantee or accept any liability with respect to the correctness of information in this document. Copyright by Volkswagen AG.
satelettronica

Installing

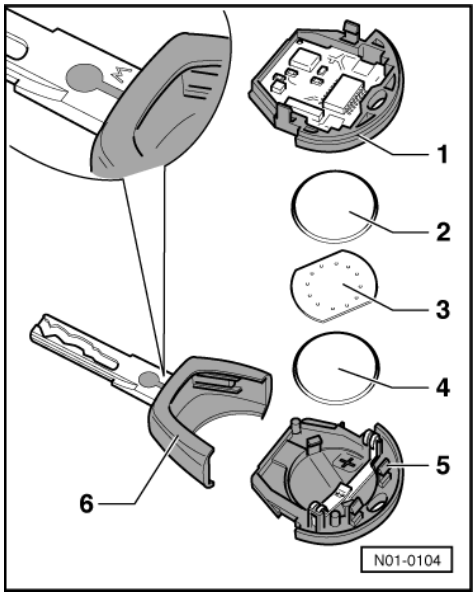

Note the polarity and correct position when installing the batteries.

- -> Place the battery -4- with the positive terminal downwards into the transmitter unit body (positive terminal is marked on housing).
- Now place the contact plate -3- on the battery -4-.
- Place battery -2- with the positive terminal downwards onto the contact plate and secure.
- Place top part of sender unit -1- and bottom part of sender unit -5- together and clip together.
- Then engage the transmitter unit with the main key.

Protected by copyright. Copying for private or commercial purposes, in part or in whole, is not permitted unless authorised by Volkswagen AG. Volkswagen AG does not guarantee or accept any liability with respect to the correctness of information in this document. Copyright by Volkswagen AG.

satelettronica